INDUSTRIAL SHIELDS

GPRS / GSM CONTROLLER 42 I/Os PLUS

GPRS/GSM Controller User Guide:

GPRS/GSM Controller User Guide

Revised, May 2019

Preface

This User Guide is been implemented by Boot & Work, S.L. working under the name Industrial Shields.

Purpose of the manual

The information contained in this manual can be used as a reference to operating, to functions, and to the technical data of the signal modules, power supply modules and interface modules.

Intended Audience

This User Guide is intended for the following audience:

- Persons in charge of introducing automation devices.
- Persons who design automation systems.
- Persons who install or connect automation devices.
- Persons who manage working automation installation.

Warnings:

- Unused pins should not be connected. Ignoring the directive may damage the controller.
- Improper use of this product may severely damage the controller.
- Refer to the controller's User Guide regarding wiring considerations.
- Before using this product, it is the responsibility of the user to read the product's User Guide and all accompanying documentation.

Application Considerations and Warranty

Read and Understand this Manual

Please read and understand this manual before using the product. Please consult your comments or questions to Industrial Shields before using the product.

Application Consideration

THE PRODUCTS CONTAINED IN THIS DOCUMENT ARE NOT SAFETY RATED. THEY SHOULD NOT BE RELIED UPON AS A SAFETY COMPONENT OR PROTECTIVE DEVICE FOR ENSURING SAFETY OF PERSONS, AS THEY ARE NOT RATED OR DESSIGNED FOR SUCH PURPOSES.

Please know and observe all prohibitions of use applicable to the products.

FOR AN APPLICATION INVOLVING SERIOUS RISK TO LIFE OR PROPERTY WITHOUT ENSURING THAT THE SYSTEM AS A WHOLE HAS BEEN DESSIGNED TO ADDRESS THE RISKS, NEVER USE THE INDUSTRIAL SHIELDS PRODUCTS.

NEVER USE THE INDUSTRIAL SHIELDS PRODUCTS BEFORE THEY ARE PROPERLY RATED AND INSTALLED FOR THE INTENDED USE WITHIN THE OVERALL EQUIPMENT OR SYSTEM.

Industrial Shields shall not be responsible for conformity with any codes, regulations or standards that apply to the combination of products in the customer's application or use of the product.

The following are some examples of applications for which particular attention must be given. This is not intended to be an exhaustive list of all possible uses of the products, nor is it intended to imply that the uses may be suitable for the products:

- Systems, machines, and equipment that could present a risk to life or property.
- Nuclear energy control systems, combustion systems, railroad systems, aviation systems, medical equipment, amusement machines, vehicles, safety equipment, and installation subject to separate industry or government regulations.
- Outdoor use, uses involving potential chemical contamination or electrical interference, or conditions or uses not described in this document.

At the customer's request, INDUSTRIAL SHIELDS will provide applicable third party certification documents identifying ratings and limitations of use that apply to the products. This information by itself is not sufficient for a complete determination of the suitability of the products in combination with the system, machine, end product, or other application or use.

Disclaimers

Weights and Dimensions

Dimensions and weights are nominal and they are not used for manufacturing purposes, even when tolerances are shown.

Performance Data

The performance data given in this manual is provided as a guide for the user in determining suitability and does not constitute a warranty. It may represent the result of INDUSTRIAL SHIELDS's test conditions, and the users most correlate it to actual application requirements. Actual performance is subject to the INDUSTRIAL SHIELDS Warranty and Limitations of Liability.

Change in Specifications

Product specifications and accessories may be changed at any time based on improvements and other reasons.

It is our practice to change model numbers when features are changed, or published ratings or when significant construction changes are made. However, some specifications of the products may be changed without any notice. When in doubt, special numbers may be assigned to fix or stablish key specifications for your application on your request. Please consult with your INDUSTRIAL SHIELDS representative at any time to confirm actual specifications of purchased products.

Errors and Omissions

The information in this document has been carefully checked and is believed to be accurate; however, no responsibility is assumed for clerical, typographical, or proofreading errors, or omissions.

Warranty and Limitations of Liability

Warranty

Industrial Shields's exclusive warranty is that the products are free from defects in materials and workmanship for a period of one year (or other period if specified) from date of sale by Industrial Shields.

INDUSTRIAL SHIELDS MAKES NO REPRESENTATION OR WARRANTY, EXPRESSED OR IMPLIED, REGARDING MERCHANABILITY, NON-INFRINGEMENT, OR FITNESS FOR PARTICULAR PURPOSE OF THE PRODUCTS. ANY BUYER OR USER ACKNOWLEDGES THAT THE BUYER OR USER ALONE HAS DETERMINED THAT THE PRODUCTS WILL SUITABLY MEET THE REQUIREMENTS OF THEIR INTENDED USE. INDUSTRIAL SHIELDS DISCLAIMS ALL OTHER WARRANTIES, EXPRESS OR IMPLIED

Limitations of Liability

INDUSTRIAL SHIELDS SHALL NOT BE RESPONSIBLE FOR SPECIAL, INDIRECT, OR CONSEQUENTIAL DAMAGES, LOSS OF PROFITS OR COMERCIAL LOSS IN ANY WAY CONNECTED WITH THE PRODUCTS, WHETHER SUCH CLAIM IS BASED ON CONTRACT, WARRANTY, NEGLIGENCE, OR STRICT LIABILITY.

IN NO EVENT SHALL INDUSTRIAL SHIELDS BE RESPONISBLE FOR WARRANTY, REPAIR OR OTHER CLAIMS REGARDING THE PRODUCTS UNLESS INDUSTRIAL SHIELDS'S ANALYSIS CONFIRMS THAT THE PRODUCTS WERE PROPERLY HANDLED, STORED, INSTALLED, AND MAINTAINED AND NOT SUBJECT TO CONTAMINATION, ABUSE, MISUSE, OR INAPPROPIATE MODIFICATION OR REPAIR.

Table of Contents

1 General Description GPRS / GSM CONTROLLER 42 I/Os PLUS 10

1.1 Zone - Nomenclature 10

1.2 Zone Distribution 11

1.3 A Zone Features 11

1.4 Mechanical dimension 12

1.5 General Features 13

2 Technical Specifications: 14

2.1 General Specifications: 14

2.2 Performance Specification: 14

3 Precautions 15

3.1 Arduino Board 15

3.2 Intended Audience 15

3.3 General Precautions 15

4 Software interface 15

5 How to connect PLC Arduino to PC 19

6 How to connect PLC to power supply 20

7 M-duino Family Pinout 21

7.1 A Zone connection 21

7.2 B Zone (Analog Shield) 23

7.3 C Zone (Analog Shield) 24

8 Switch Configuration 25

8.1 A Zone: Communications 25

8.2 Analog Shield 27

9 GPRS/GPS I/Os 5V pins 28

9.1 I2C pins – SDA/SCL 28

9.2 Serial 0 – RX0/TX0 28

9.3 Serial 1 – RX1/TX1 29

9.4 SPI – MISO/MOSI/SCK 29

9.5 Pin 3 29

9.6 Pin 2 30

10 A Zone Features: Communications & RTC & uSD..... 31
10.1 RS-232 31
10.2 RS-485 31
10.3 I2C..... 32
10.4 SPI..... 32
10.5 TTL 32
10.6 Ethernet..... 33
10.7 RTC..... 33
10.8 uSD 34
10.9 GPRS/GSM..... 34
11 I/O technical details: 37
12 Typical Connections 39
13 Connector details: 43
14 Mechanical Characteristics 44

1 General Description GPRS / GSM CONTROLLER 42 I/Os PLUS

1.1 Zone - Nomenclature

The nomenclature shown in this point will be used in the whole User Guide, so it is important to understand this nomenclature.

The nomenclature to differentiate the zones is based on the Alphabet, being A the shield from below and C the shield from above. Having a B in the middle of them. It has 3 zones (A, B, C):

- The inputs in the zone B are named I0.X, being X any number suitable in the Shield. Outputs are named as Q0.X and relays as R0.X
- The inputs in the zone C are named I1.X, being X any number suitable in the Shield. Digital Outputs are named as Q1.X and Analog Outputs as A1.X.

1.2 Zone Distribution

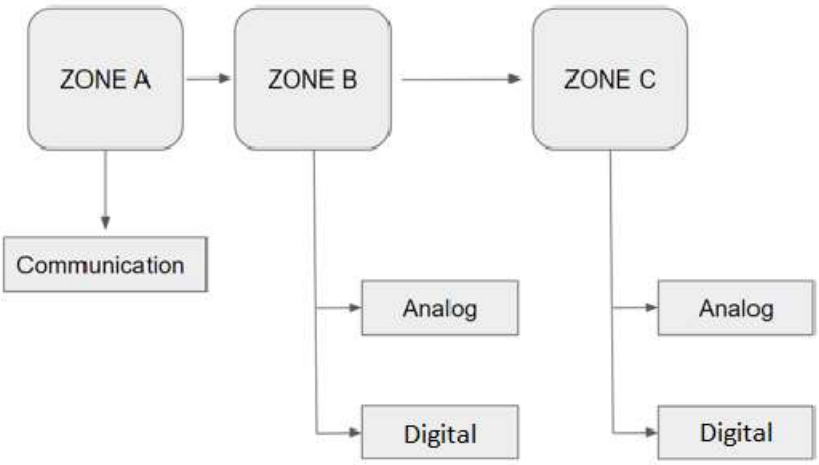

1.3 A Zone Features

Shield	A Zone
Communication Shield	(1x) Ethernet (1x) USB (1x) I2C (3x) TTL (1x) RS-232 (1x) HALF/FULL Duplex RS-485 (1x) SPI external Port (1x) RTC (1x) uSD Socket (1x) GPRS/GSM

1.4 Mechanical dimension

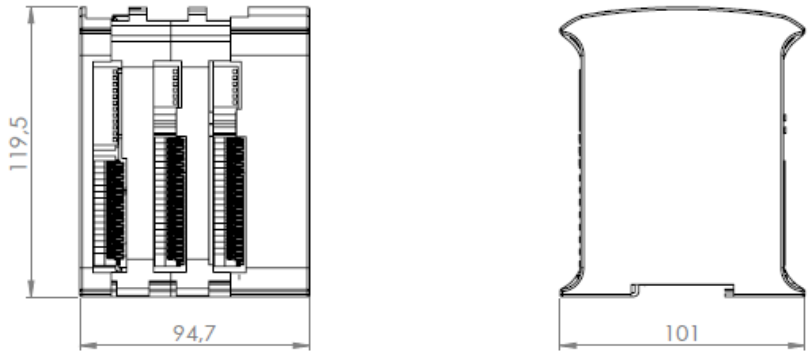

2.

1.5 General Features

CONECTABLE PLC ARDUINO 24Vcc M-DUINO		
MODEL TYPE	**GPRS/GSM Controller General Spec.**	
Input Voltage	12 to 24Vdc	Fuse protection (2.5A) Polarity protection
I max.	1.5A	
Size	101x119.5x70.1	101x119.5x119.3
Clock Speed	16MHz	
Flash Memory	256KB of which 8KB used by bootloader	
SRAM	8KB	
EEPROM	4KB	
Communications	I2C – Ethernet Port – USB – GPRS – RS485 – RS232 -- SPI – (2x) Rx, Tx (Arduino pins)	Max232-Max485-W5500-Sim800L
USB consideration!	**Only meant for uploading or debugging, not always connected as a serial in a project!**	**Cannot be working in a final application**
An/Dig Input 10bit (0-10Vcc)	0 to 10V Input Impedance: 39K Separated PCB ground	
Digital Isolated Input (24Vcc)	7 to 24Vdc I min: 2 to 12 mA Galvanic Isolation	
*** Interrupt isolated Input HS** (24Vcc)	7 to 24Vdc I min: 2 to 12 mA Galvanic Isolation	
Analog Output 8bit (0-10Vcc)	0 to 10Vdc I max: 20 mA Separated PCB ground	
Digital Isolated Output (24Vcc)	5 to 24Vdc I max: 70 mA Galvanic Isolation Diode Protected for Relay	Imax 24Vdc: 410 mA
Digital Isolated Output Relay	220V Vac I max: 5A Galvanic Isolation Diode protected for Relay	
PWM Isolated Output 8bit (24Vcc)	5 to 24Vdc I max: 70 mA Galvanic Isolation Diode Protected for Relay	
Expandability	I2C - 127 elements - Serial Port RS232/RS485/GPRS	
*** By using this type of signal can no longer use Digital signal (24Vdc)**		

2 Technical Specifications:

2.1 General Specifications:

Item		M-DUINO B ZONE
Power supply voltage	**DC power supply**	12 to 24Vdc
Operating voltage range	**DC power supply**	11.4 to 25.4Vdc
Power consumption	**DC power supply**	30VAC max.
External power supply	**Power supply voltage**	24Vdc
	Power supply output capacity	700Ma
Insulation resistance		20MΩ min.at 500Vdc between the AC terminals and the protective earth terminal.
Dielectric strength		2.300 VAC at 50/60 Hz for one minute with a leakage current of 10mA max. Between all the external AC terminals and the protective ground terminal.
Shock resistance		80m/s^2 in the X, Y and Z direction 2 times each.
Ambient temperature (operating)		0º to 45ºC
Ambient humidity (operating)		10% to 90% (no condensation)
Ambient environment (operating)		With no corrosive gas
Ambient temperature (storage)		-20º to 60ºC
Power supply holding time		2ms min.
Weight		561g max.

2.2 Performance Specification:

Arduino Board	**ARDUINO MEGA 2560**
Control method	Stored program method
I/O control method	Combination of the cyclic scan and immediate refresh processing methods.
Programming language	Arduino IDE. Based on wiring (Wiring is an Open Source electronics platform composed of a programming language. “similar to the C”. http://arduino.cc/en/Tutorial/HomePage
Microcontroller	ATmega2560
Flash Memory	256KB of which 8KB are used by the bootloader
Program capacity (SRAM)	8KB
EEPROM	4KB
Clock Speed	16MHz
Clock Speed	16MHz

3 Precautions

Read this manual before attempting to use the GPRS/GSM 42 I/Os PLUS PLC and follow its descriptions for reference during operation.

3.1 Arduino Board

The GPRS/GSM Controller includes an Arduino Mega Board as controller.

3.2 Intended Audience

This manual is intended for technicians, which must have knowledge on electrical systems.

3.3 General Precautions

The user must operate M-Duino according to the performance specifications described in this manual.

Before using the GPRS/GSM Controller under different conditions from what has been specified in this manual or integrating GPRS/GSM Controller to nuclear control systems, railroad systems, aviation systems, vehicles, combustion systems, medical equipment, amusement machines, safety equipment and other systems, machines, and equipment that may have a serious influence on lives and property if used improperly, consult your INDUSTRIAL SHIELDS representative. Ensure that the rating and performance characteristics of GPRS/GSM Controller are sufficient for the systems, machines, and equipment, and be sure to provide the systems, machines, and equipment double safety mechanisms. This manual provides information for programming and operating the GPRS/GSM 42 I/Os PLUS Controller.

4 Software interface

Industrial Shields PLC are programmed using Arduino IDE, which is a software based on the C language. They can also be programmed using directly C but it is much easier working with Arduino IDE as it provides lots of libraries that helps in the programming.

Industrial Shields provides boards for programming the PLCs much easier. Basically it is no needed to define the pins and if that pins are inputs or outputs. Everything is set up automatically if using the boards.

In order to install Industrial Shields boards, these are the steps that must be followed.

Requirements:

Arduino IDE 1.8.0 or above (better to have always the latest version).

Steps:

1. Open Arduino IDE and go to: “File -> Preferences” located in the top left corner.

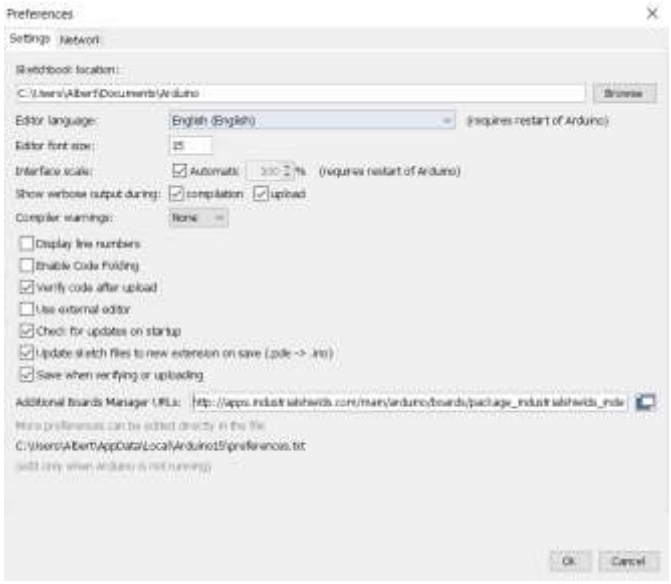

2. In Additional Boards Manager URLs write the following:

http://apps.industrialshields.com/main/arduino/boards/package_industrialshields_index.json

3. Press OK to save the changes.

4. Go to: Tools -> Board: … -> Boards Manager

5. Search for “industrialshields” on the browser.

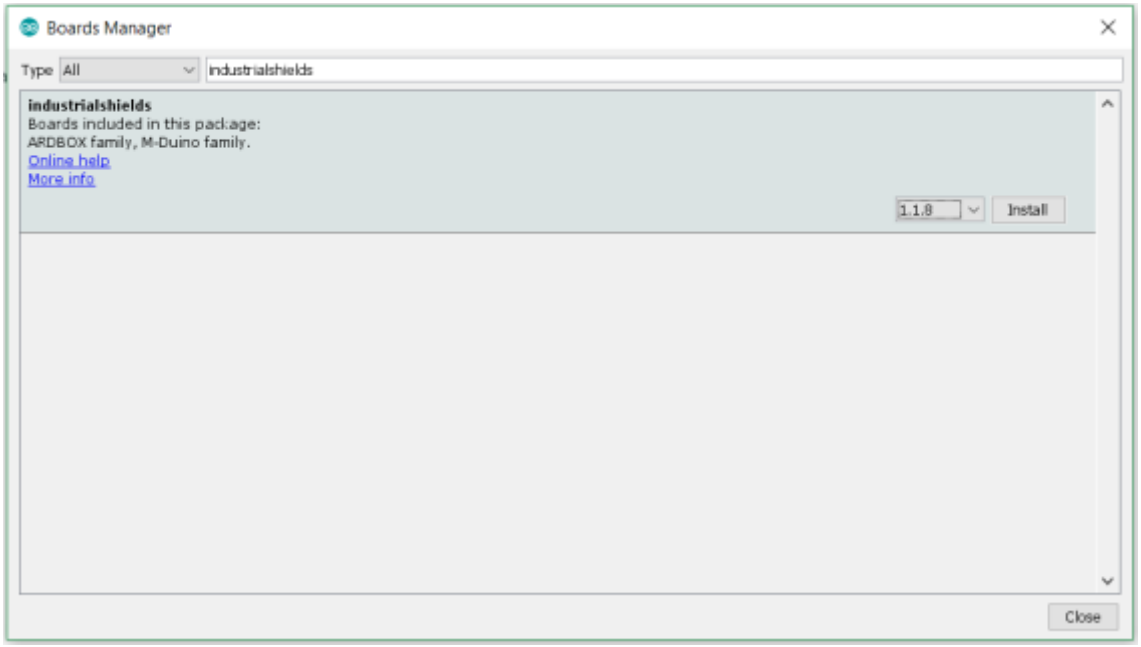

6. Click install (selecting the latest version).

Following these steps you will be able to see now the Industrial Shields Boards:

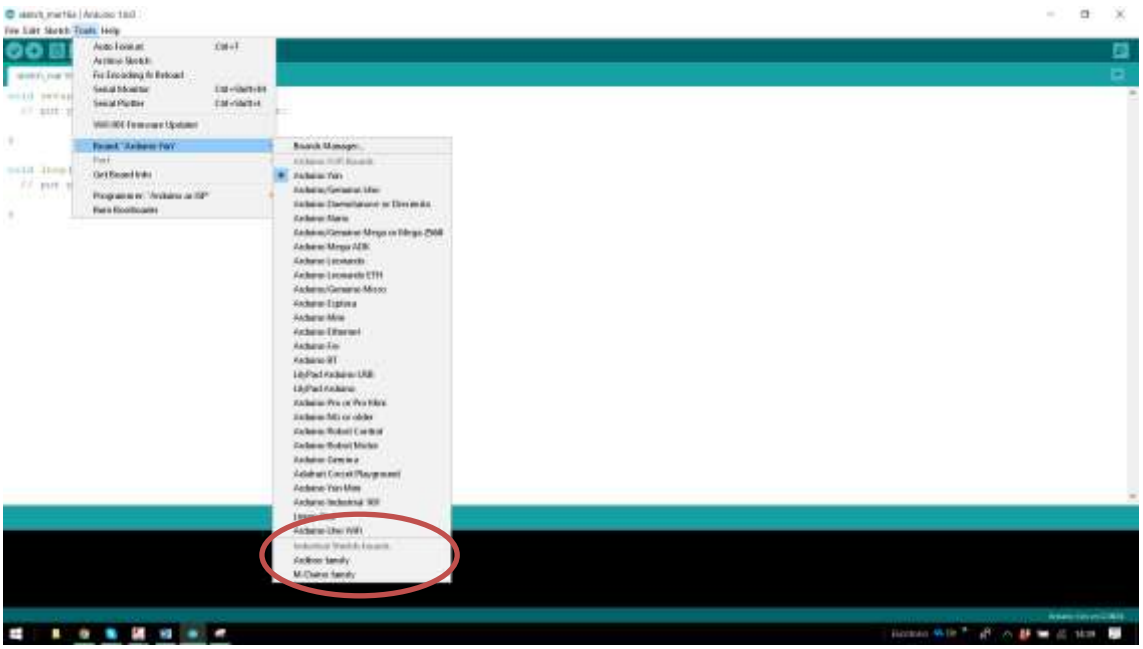

Once it is selected the Ardbox Family or M-Duino family an extra option will appear on Tools:

There, it can be selected the exact model for every family.

In this case, the GPRS/GSM Controller uses the MDuino 42 + model, as you can see in the following image:

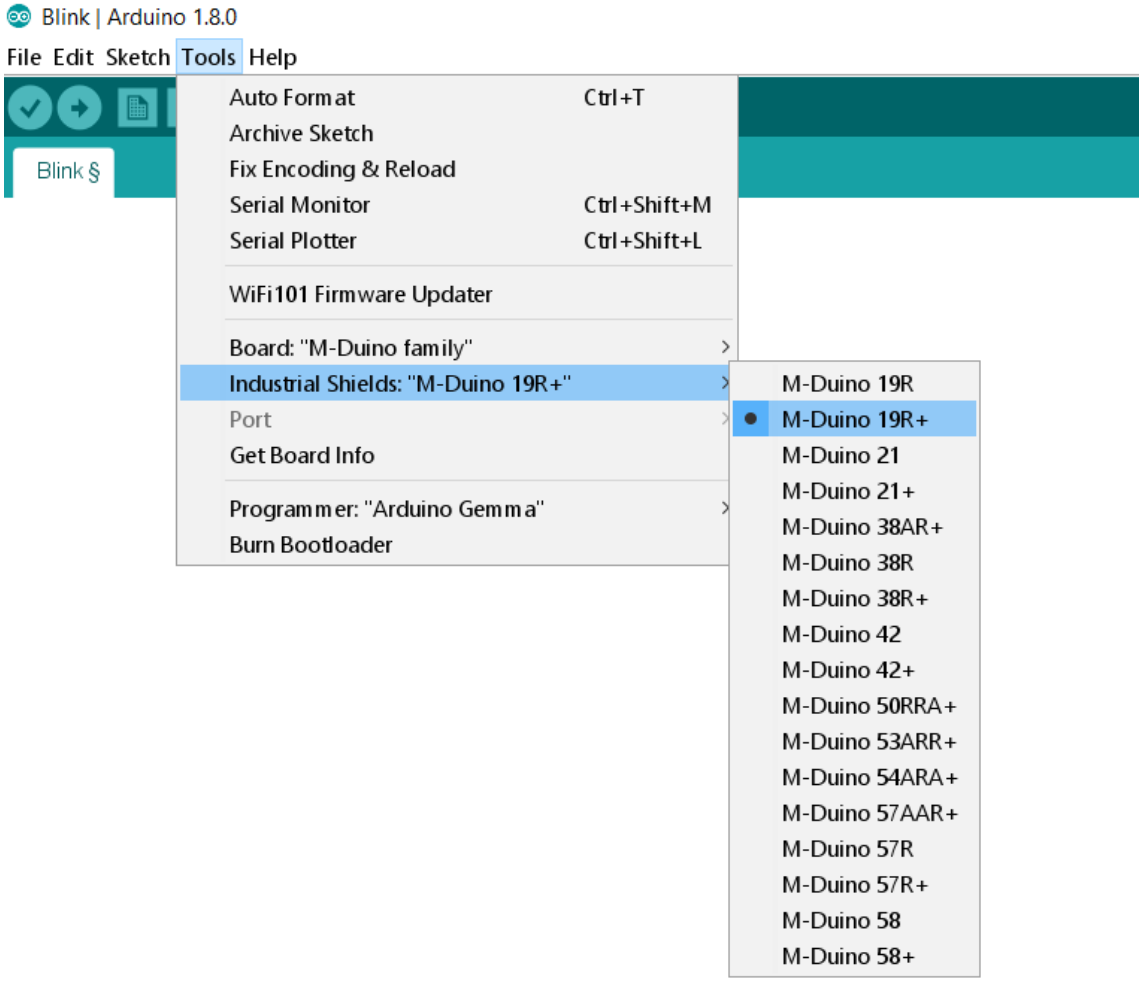

Also there are some examples of programming in File -> Examples -> M-Duino Family.

Furthermore there are some extra libraries that can be found in Industrial Shields github.

https://github.com/IndustrialShields/

5 How to connect PLC Arduino to PC

- Connect USB port from PLC to PC.

NOTE:
M-Duino Family uses USB-B cable.

- Open Arduino IDE interface:

- Select Industrial Shields boards -> M-Duino Family

- Select the correct M-Duino Board (M-Duino 42+).

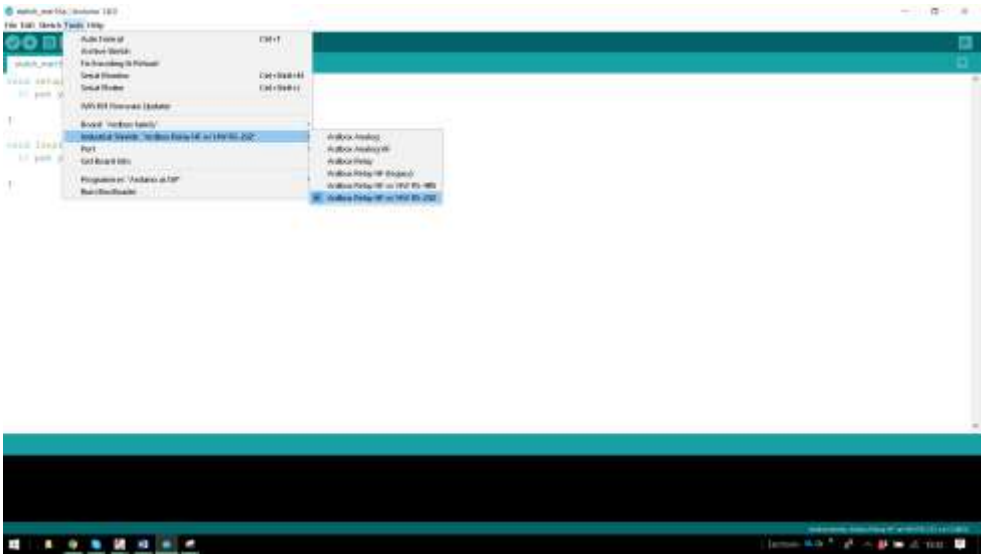

- Select correct port.

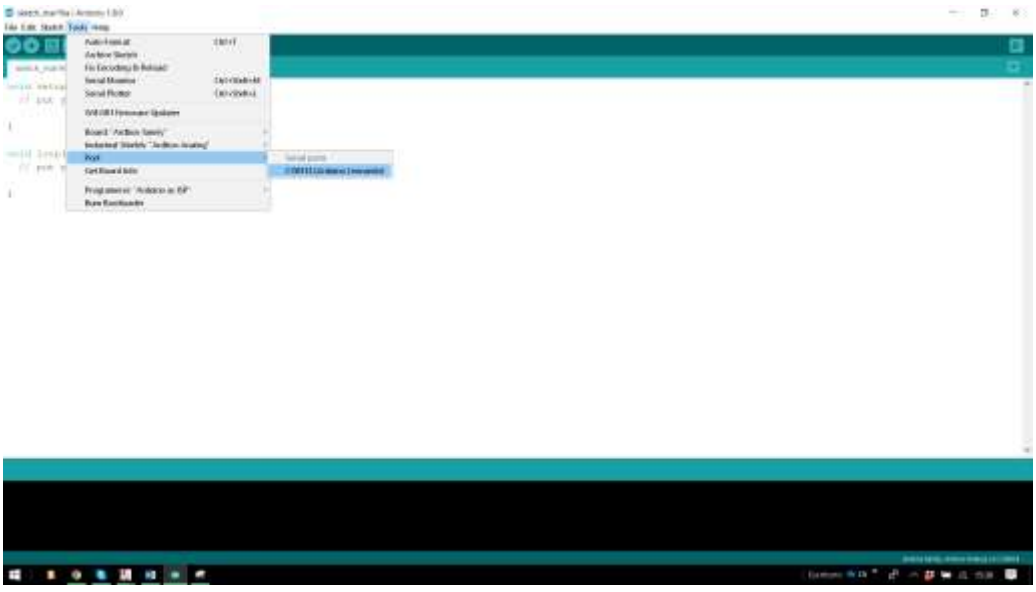

6 How to connect PLC to power supply

- M-Duino Family PLCs are 12-24Vdc supplied. IMPORTANT: The polarity **IS NOT REVERSAL!**
- Make sure that the live and GND connector of the power supply match the PLC.
- Make sure that the power supply mains output is not higher than 24Vdc.

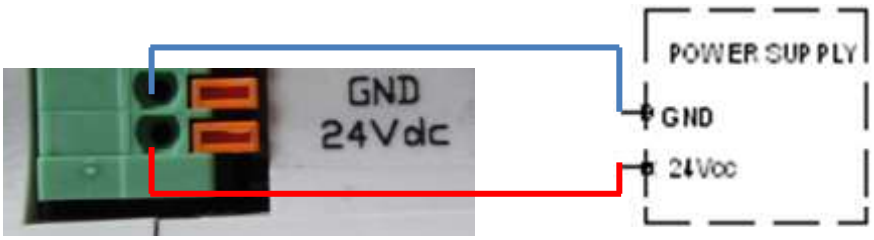

- Suggested power suppliers

* Not recommended for industrial applications. The *Jack* connector needs to be removed and use the live and GND connectors.

7 M-duino Family Pinout

7.1 A Zone connection

Base (common unit)		
A Zone		
M-Duino Connector	*Arduino Pin*	Function
SCL	*21*	I2C/SS
SDA	*20*	I2C/SS
RX0	*1*	RX0/SS
TX0	*0*	TX0/SS
RX1*	*19*	RX1/SS
TX1*	*18*	TX1/SS
TX	*16*	RX2(serial 2)
RX	*17*	TX2(serial 2)
Z-	-	RS485
Y+	-	RS485
B-	-	RS485
A+	-	RS485
PIN3	*3*	Arduino Pin
50 SO	*50*	SPI
51 SI	*51*	SPI
52 SCK	*52*	SPI
Reset	*Reset*	SPI
Vin5	*Vin5*	5V
NC	*NC*	Not Connected
GND	-	Gnd
GND	-	Gnd
24Vdc		Power Supply

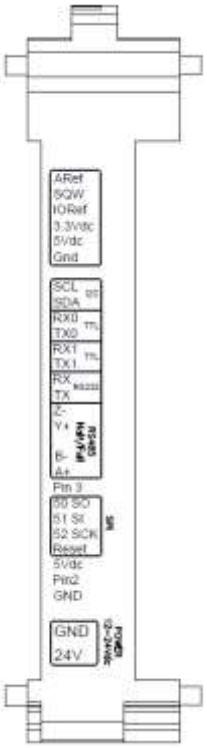

Configuration Switch* (see section 8 for configuring the communications. Enabling communications disables some I/Os)

Rx1/Tx1 * Pins used for the GPRS module

Communication Pins

Power supply connectors (24Vdc – GND)

SS: Chip Select pins. These pins can act as TTL, so they can work for the Chip Select pin of any device.

Base (common unit)		
A Zone		
M-Duino Connector	*Arduino Pin*	Function
AREF	*AREF*	Arduino PIN
IOREF2	*IOREF2*	Arduino PIN
IOREF1	*IOREF1*	Arduino PIN
7Vdc	*7Vdc*	-
GND	*GND*	GND
3.3Vdc	*3.3Vdc*	Arduino PIN
GND	*GND*	GND
5Vdc	*5Vdc*	-
GND	*GND*	GND

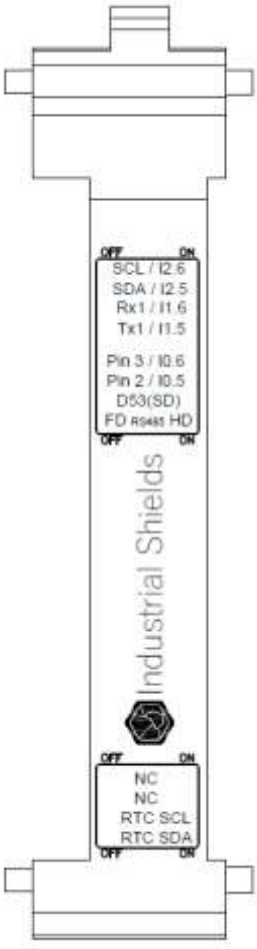

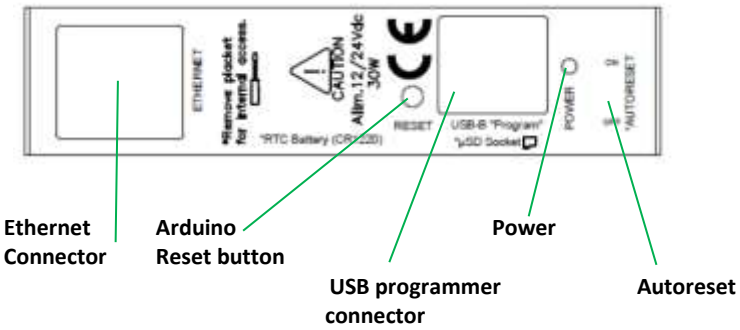

**NOTE: Autoreset. Arduino mega has auto reset when using serial communication code. Set switch to OFF when using serial communication. When uploading code to Arduino Mega set switch to ON.*

7.2 B Zone (Analog Shield)

B Zone		
M-Duino Connector	*Arduino Pin*	Function
I0.12	*59*	Analog/ Digital In
I0.11	*58*	Analog/ Digital In
I0.10	*57*	Analog/ Digital In
I0.9	*56*	Analog/ Digital In
I0.8	*55*	Analog/ Digital In
I0.7	*54*	Analog/ Digital In
(-)I0.6/INT1	-	GND I0.6
I0.6/INT1[1]	*3*	Interrupt 1 In
NC	-	Not Connected
NC	*NC*	Not Connected
(-)I0.4	-	GND I0.4
I0.4	*26*	Digital Input
(-)I0.3	-	GND I0.3
I0.3	*25*	Digital Input
(-)I0.2	-	GND I0.2
I0.2	*24*	Digital Input
(-)I0.1	-	GND I0.1
I0.1	*23*	Digital Input
(-)I0.0	-	GND I0.0
I0.0	*22*	Digital Input

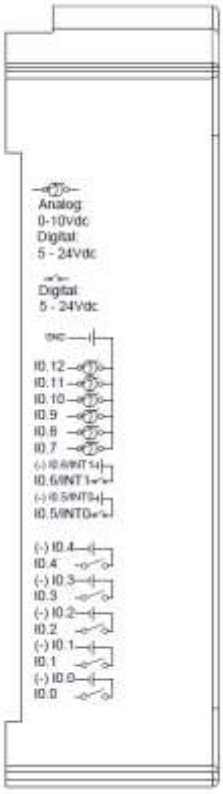

Analog/Digital Inputs

Interrupt Inputs (isolated)

Digital Inputs (isolated)

Top Zone

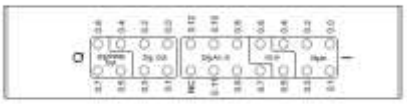

Led indicator I/Os state

B Zone		
M-Duino Connector	*Arduino Pin*	Function
GND	*GND*	GND
A0.7[1]	*6*	Analog Out
A0.6[1]	*5*	Analog Out
A0.5[1]	*4*	Analog Out
Q/Vdc	-	External Isolated Out Vdc
COM(-)	-	External Isolated Out GND
Q0.7[1]	*6*	Digital/PWM Out
Q0.6[1]	*5*	Digital/PWM Out
Q0.5[1]	*4*	Digital/PWM Out
Q0.4	*40*	Digital Out
Q0.3	*39*	Digital Out
Q0.2	*38*	Digital Out
Q0.1	*37*	Digital Out
Q0.0	*36*	Digital Out

Relay Shield

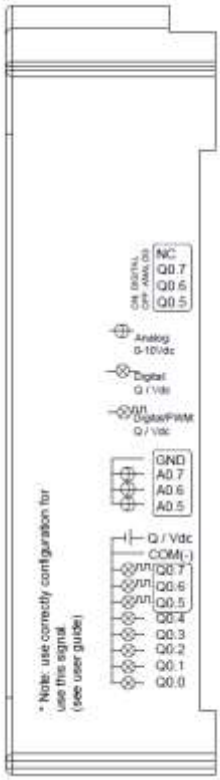

Configuration Switch*
(see section 8 to select the correct configuration for outputs).

Analog Outputs

Voltage Supply/Reference for Digital/PWM Outputs (isolated)

PWM/Digital Outputs

[1] See section 8 to select suitable switch configuration for enable these connections.

7.3 C Zone (Analog Shield)

C Zone		
M-Duino Connector	*Arduino Pin*	Function
I1.12	*65*	Analog/ Digital In
I1.11	*64*	Analog/ Digital In
I1.10	*63*	Analog/ Digital In
I1.9	*62*	Analog/ Digital In
I1.8	*61*	Analog/ Digital In
I1.7	*60*	Analog/ Digital In
(-)I1.6/INT1	-	GND I1.6
I1.6/INT1[1]	*19*	Interrupt 1 In
(-)I1.5/INT0	-	GND I1.5
I1.5/INT0[1]	*18*	Interrupt 0 In
(-)I1.4	-	GND I1.4
I1.4	*31*	Digital Input
(-)I1.3	-	GND I1.3
I1.3	*30*	Digital Input
(-)I1.2	-	GND I1.2
I1.2	*29*	Digital Input
(-)I1.1	-	GND I1.1
I1.1	*28*	Digital Input
(-)I1.0	-	GND I1.0
I1.0	*27*	Digital Input

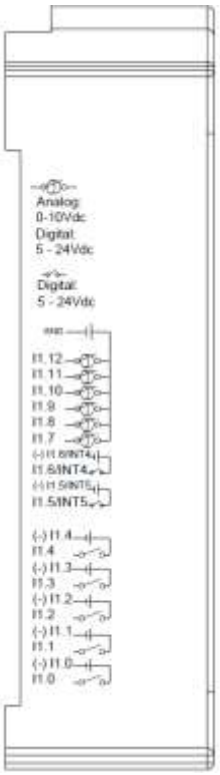

Analog/Digital Inputs

Interrupt Inputs (isolated)

Digital Inputs (isolated)

Top Zone

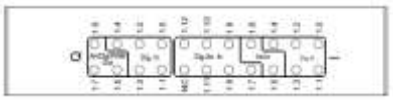

Led indicator I/Os state

C Zone		
M-Duino Connector	*Arduino Pin*	Function
GND	*GND*	GND
A1.7[1]	*7*	Analog Out
A1.6[1]	*9*	Analog Out
A1.5[1]	*8*	Analog Out
Q/Vdc	-	External Isolated Out Vdc
COM(-)	-	External Isolated Out GND
Q1.7[1]	*7*	Digital/PWM Out
Q1.6[1]	*9*	Digital/PWM Out
Q1.5[1]	*8*	Digital/PWM Out
Q1.4	*45*	Digital Out
Q1.3	*44*	Digital Out
Q1.2	*43*	Digital Out
Q1.1	*42*	Digital Out
Q1.0	*41*	Digital Out

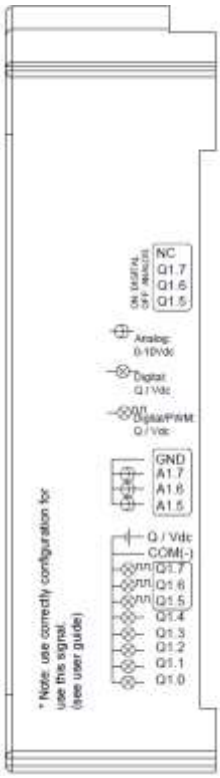

Configuration Switch*
(see section 8 to select the correct configuration for outputs).

Analog Outputs

Voltage Supply/Reference for Digital/PWM Outputs (isolated)

PWM/Digital Outputs

See section 8 to select suitable switch configuration for enable these connections.

8 Switch Configuration

8.1 A Zone: Communications

LEFT ZONE		
Switch	Analog Shield	
	ON	OFF
D ZONE		
SCL/I2.6	NC	SCL
SDA/I2.5	NC	SDA
C ZONE		
RX1/I1.6	I1.6	RX1
TX1/I1.5	I1.5	TX1
B ZONE		
Pin 3/I0.6	I0.6	Pin 3
Pin 2/I0.5	I0.5	Pin 2
uSD & RS-485		
D53(SD)	Q2.0	SD
FD RS-485 HD	HD	FD

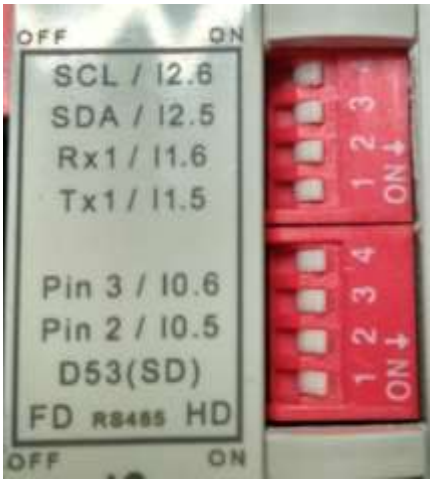

4. SCL/I2.6: ALWAYS AT OFF POSITION. On a GPRS/GSM Controller this switch is **not connected**.

3. SDA/I2.5: ALWAYS AT OFF POSITION. On a GPRS/GSM Controller this switch is **not connected**.

2. RX1/I1.6: Choosing between RX1 or the input I1.6. If this switch is ON, it enables the I1.6 input and disables the RX1. If this switch is OFF, it enables RX1 and disables I1.6.

1. TX1/I1.5: Choosing between TX1 or the input I1.5. If this switch is ON, it enables the I1.5 input and disables the TX1. If this switch is OFF, it enables TX1 and disables I1.5.

4. Pin 3/I0.6: Choosing between Pin 3 or the input I0.6. If this switch is ON, it enables the I0.6 input and disables the Pin 3. If this switch is OFF, it enables Pin 3 and disables I0.6.

3. Pin 2/I0.5: ALWAYS AT OFF POSITION. Pin 2 and I0.5 Are used by the Sim800L module (The GPRS/GSM Module). **DON'T USE I0.5 and Pin 2!**

2. D53(SD): ALWAYS AT OFF POSITION. On a GPRS/GSM Controller this switch allows the uSD storage, if this switch is ON, it does not enalbe any pin.

1. FD RS-485 HD: Choosing between FD or HF. If this switch is ON, it enables the Half Duplex (HD) option and disables the FD. If this switch is OFF, it enables Full Duplex (FD) and
disables HD

LEFT ZONE		
SWITCH	ON	OFF
NC	-	-
NC	-	-
RTC SCL	RTC	-
RTC SDA	RTC	-

1. **RTC SDA:** This switch enables the communication to communicate with the RTC using I2C. Having this switch in ON mode it actives this communication, whereas if it is in OFF mode it disables the I2C to reach the RTC.

2. **RTC SCL:** This switch enables the communication to communicate with the RTC using I2C. Having this switch in ON mode it actives this communication, whereas if it is in OFF mode it disables the I2C to reach the RTC.

3. **NC:** Not connected. This switch is not connected to anything, it doesn't matter if it is in ON mode or OFF mode.

4. **NC:** Not connected. This switch is not connected to anything, it doesn't matter if it is in ON mode or OFF mode.

8.2 Analog Shield

B ZONE		
SWITCH	ON	OFF
NC	-	-
Q0.7	Q0.7	A0.7
Q0.6	Q0.6	A0.6
Q0.5	Q0.5	A0.5

C ZONE		
SWITCH	ON	OFF
NC	-	-
Q1.7	Q1.7	A1.7
Q1.6	Q1.6	A1.6
Q1.5	Q1.5	A1.5

For the Analog Shield if a switch is set to ON, it can only act as Digital Output. If it is set to OFF it can only act as an Analog Output.

If it is desired to use a Digital Output the pin must be set to ON and the pin that will provide this digital output is represented with Q0.X, being X any number of the tables above.

If it is desired to use an Analog Output the pin must be set to OFF and the pin that will provide this analog output is represented with A0.X, being X any number of the tables above.

9 GPRS/GPS I/Os 5V pins

The GPRS/GSM Controller has some of the Mega board pins available. These pins can be programmed according to Arduino features such as I/Os operating at 5V or any additional features present in the pins (for example I2C communication in pins SCL and SDA). As this pins are directly connected to the Arduino Mega board they are not as well protect as the normal inputs. These pins are mainly meant to be used as prototyping.

The Arduino board available pins are summarized in the table below. In order to access some of these pins the configuration switch must be set to OFF position (see section 8) and some extra considerations must be taken in consideration when using these pins.

M-Duino terminal	Arduino pin	Enable Arduino pin
SCL	21	Communication switch: OFF
SDA	20	Communication switch OFF
RX0	0	
TX0	1	
RX1	19	Communication switch: OFF
TX1	18	Communication switch: OFF
MISO	50	
MOSI	51	
SCK	52	
Pin 3	3	Communication switch: OFF

***IMPORTANT:** Do not connect the terminals in the chart above to voltages higher than 5V. These terminals provide direct access to the Mega board.

A part from the switch configuration there are some special conditions depending on these 5V. Now it is going to be shown the considerations to operate with these pins.

9.1 I2C pins – SDA/SCL

The I2C protocol is meant to work in a pull-up configuration. A pull-up configuration means that when the pin is at rest (nothing connected to it) it always reads a HIGH value. In this case it reads 5V when nothing is connected. The pull-up configuration is stablished by default in these pins.

If it is meant to work them as a GPIO at 5V, it has to be considered that they are pull-up inputs.

*IMPORTANT: I2.5 & I2.6 are not pull-up inputs although they are referred to the I2C pins (switch configuration). There is a “reverse pull-up circuit “that is stablished in order to have the same behaviour as the other inputs.

9.2 Serial 0 – RX0/TX0

The Serial0 protocol can work also as a 5V pin. These pins should be used ultimately, only in case that all the 5V pins are already performing a function. This is because they are shared with the USB interface. If using these pins, the USB communication cannot be working at the same time. When the PLC is not installed, the USB communication is normally required for

debugging, uploading and intercommunicating with the Ethernet controller. If using both interfaces at the same time the Arduino board will get blocked.

These pins are not stablished with a pull-up or a pull-down configuration. The state of these pins is unknown. If these pins must be used, they require a pull-up or a pull-down configuration. The Arduino board allows the pins to be set in a pull-up configuration. If not it must be stablished an external pull-up or pull-down circuit in order to correctly work with these pins.

9.3 Serial 1 – RX1/TX1

In the GPRS/GSM Controller, Serial 1 is used to communicate through the Sim800L integrated GPRS/GSM Module. If you want to use Serial 1 instead of GPRS/GSM, you must set the **Pin 2** (Pin used as the GPRS/GSM) **always at high position**.

Remember: if you use the Serial1 in your program, you will not be able to use the GPRS / GSM functionalities!

These pins are not stablished with a pull-up or a pull-down configuration. The state of these pins is unknown. If these pins must be used, they require a pull-up or a pull-down configuration. The Arduino board allows the pins to be set in a pull-up configuration. If not it must be stablished an external pull-up or pull-down circuit in order to correctly work with these pins.

9.4 SPI – MISO/MOSI/SCK

These pins can only work as a 5V pins if the Ethernet protocol is not going to be used. As the Ethernet protocol uses the SPI to communicate with the Arduino board, both behaviours cannot happen at the same time as the Ethernet would not work.

These pins are not stablished with a pull-up or a pull-down configuration. The state of these pins is unknown. If these pins must be used, they require a pull-up or a pull-down configuration. The Arduino board allows the pins to be set in a pull-up configuration. If not it must be stablished an external pull-up or pull-down circuit in order to correctly work with these pins.

9.5 Pin 3

This pin is only referred to the inputs I0.1. If the switch configuration is in OFF position the pin Pin 3 will be available.

These pins are not stablished with a pull-up or a pull-down configuration. The state of these pins is unknown. If these pins must be used, they require a pull-up or a pull-down configuration. The Arduino board allows the pins to be set in a pull-up configuration. If not it

must be stablished an external pull-up or pull-down circuit in order to correctly work with these pins.

9.6 Pin 2

REMEMBER THAT PIN2 IS USED BY THE SIM800L MODULE AS RESET PIN, SO IS NOT AVAILABLE IN THE GPRS/GSM CONTROLLER!

IF YOU WANT TO USE SERIAL1, YOU MUST SET THE PIN2 ALWAYS AT HIGH POSITION.

10 A Zone Features: Communications & RTC & uSD

10.1 RS-232

The Arduino Mega function code to access the RS-232 port in the M-Duino is Serial2 (pins 16 and 17 of the Arduino Mega).

For the RS-232 communication protocol there isn't any switch that affects it. So it does not matter the configuration of the switches to implement a RS-232 communication.

Using the boards of Industrial Shields, there is a library that simplifies the RS-232 implementation.

10.2 RS-485

For RS485 communication protocol the defined Arduino Mega pins are showed in the chart below.

Function	Arduino Pin
DI	14
RO	15
RE	11
DE	46

For the RS-485 communication protocol there is only one switch that affects in this communication. The RS-485 protocol will be always enabled, the only switch that affects is the one called "FD rs-485 HD" (See Section 8). This switch makes the choosing between RS-485 Half Duplex or RS-485 Full Duplex (RS-422).

Using the boards of Industrial Shields, there is a library that simplifies the RS-485 implementation.

10.3 I2C

I2C communication **DOES NOT REQUIRE** a pull-up resistor for the M-Duino Family. The pull-up resistor is already implemented in the PCB.

I2C communication is configured by switches, so the switches must be configured in order to enable the I2C communication.

Switch	Analog Shield		Relay Shield	
	ON	OFF	ON	OFF
D ZONE				
SCL/I2.6	I2.6	SCL	I2.1	SCL
SDA/I2.5	I2.5	SDA	I2.0	SDA

To enable I2C the switches SCL/I2.6(I2.1) & SDA/I2.5(I2.0) must be set to OFF mode. In this mode the inputs are totally disabled and the I2C is now enabled.

Industrial Shields does not provide any library to implement the I2C as it can be used the standard library of Arduino called Wire.

10.4 SPI

The M-Duino pins used for the SPI bus are summarized in the table below. For SPI bus MISO, MOSI and CLOCK pins are common to all the connected devices to the M-Duino, conversely, each of the connected devices will have a single and dedicated SS pin.

Function	M-Duino connection	Mega board pin
MISO	50 S0	50
MOSI	51 SI	51
CLOCK	52 SCK	52
Reset	Reset	Reset
SS	SCL/SDA/RX0/TX0/RX1/TX1/RX3/TX3/Pin2/Pin3	21/20/1/0/19/18/15/14/2/3

Check the switch configuration at section 8 to enable SS pins.

10.5 TTL

M-Duino has two TTL ports, RX0/TX0, RX1/TX1. TTL0 is accessed with the function Serial (pins 0 and 1 of the Arduino Mega). TTL1 is accessed with the function Serial1 (pins 18 and 19 of the Arduino Mega).

In order to use the TTL pins the configuration of the switches have to be the following one:

Switch	Analog Shield		Relay Shield	
	ON	OFF	ON	OFF
C ZONE				
RX1/I1.6	I1.6	RX1	I1.1	RX1
TX1/I1.5	I1.5	TX1	I1.0	TX1

If the switches RX1/I1.6(I1.1) & TX1/I1.5(I1.0) are in OFF mode, the RX1/TX1 will be enabled. In order to use TTL3 these switches must be in OFF mode.

10.6 Ethernet

M-Duino Ethernet port controller is based on w5500 IC, which is the compatible IC compatible with Arduino Ethernet2 Shield libraries. All Ethernet shield Arduino libraries are compatible with the M-Duino. In the M-Duino, W5500 IC communicates to the Mega board via SPI bus (SS Arduino Mega pin 10).

10.7 RTC

M-Duino RTC Module is based on the DS1307 Chip. This chip works with the I2C protocol communication, so it is required to have enabled the I2C protocol.

4 switches have to be configured in order to enable the RTC features:

LEFT ZONE		
SWITCH	ON	OFF
NC	-	-
NC	-	-
RTC SCL	RTC	-
RTC SDA	RTC	-

RTC SCL & RTC SDA must be set to ON mode to enable the I2C wires to the RTC. If they are in OFF mode, the Arduino won't communicate with the RTC.

Switch	Analog Shield		Relay Shield	
	ON	OFF	ON	OFF
SCL/I2.6	I2.6	SCL	I2.1	SCL
SDA/I2.5	I2.5	SDA	I2.0	SDA

I2C must be enabled in order to communicate with the RTC. See section 11 I2C to enable it.

Using the boards of Industrial Shields, there is a library that simplifies the RTC implementation called RTC.

10.8 uSD

The micro SD uses the SPI communication to interact with the Arduino Mega. The SPI protocol is always enabled, as there are no switches that configure it. However, there is a switch that must be placed to ON mode in order to communicate with the uSD:

D53(SD): If this Switch is OFF, it enables the Chip Select of the microSD socket. If this switch is ON, it does not enable any pin, so you must putt he switch **always at OFF position!**

The uSD socket is found in the TOP part of the communication Shields, so in the frontal part of the PLC, it is required to open the plastic found in the frontal part and the socket is located under the supply of the Arduino.

LEFT ZONE				
Switch	Analog Shield		Relay Shield	
	ON	OFF	ON	OFF
uSD				
D53(SD)	Q2.0	D53(SD)	-	D53(SD)

Using the boards of Industrial Shields, there is a library that simplifies the uSD implementation called SD. It is the same as the Arduino library, with the only modification of using the pin 53 to select the Chip Select of the uSD chip.

10.9 GPRS/GSM

The SIM800L module is the integrated module for the use of GPRS / GSM in this PLC and to program it you must download this library on your Arduino IDE.

You can test the GPRS / GSM functionality using the examples that come with the library:

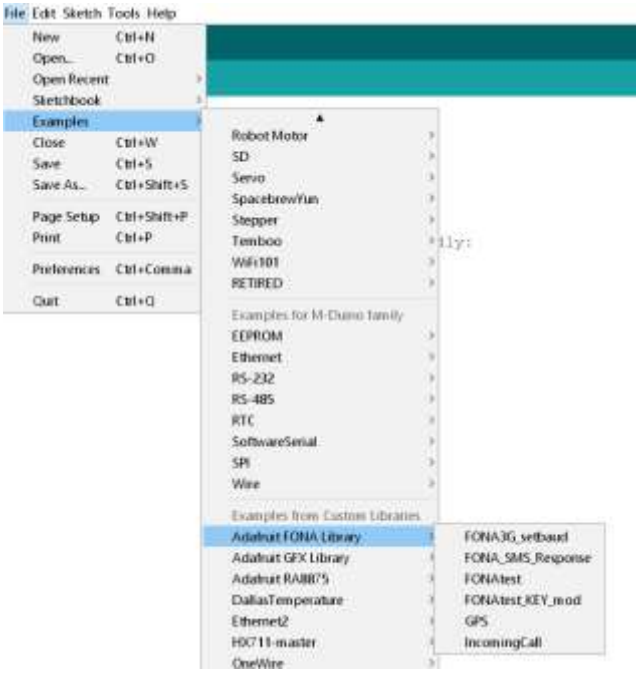

When defining the pins in the program, take into account that the internal connections between the Sim800l module and the Arduino Mega are the following:

Arduino Mega Pinout	Sim800L Pinout
5Vdc	Vcc
GND	GND
Tx1 (Pin 18)	TxD
Rx1 (Pin19)	RxD
Pin 2	RST

How to define it in a sketch:

```
#define FONA_RX 19 //RX1 on Arduino Mega
#define FONA_TX 18 //TX1 on Arduino Mega
#define FONA_RST 2
```

The GPRS/GSM protocol is always enabled as there are no switches that configure it.

the GPRS / GSM protocol uses the Serial1 of the equipment to be able to communicate and the pin2 for the module reset.

If you want to use Serial1, you must indicate in the program that pin2 is always in High position. In case of using the Serial1, the GPRS / GSM communication can not be used.

11 I/O technical details:

Digital Output Waveform:

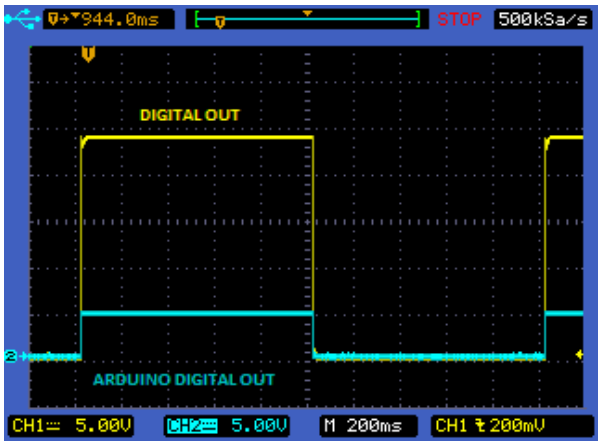

Digital Out-put Turn-off:

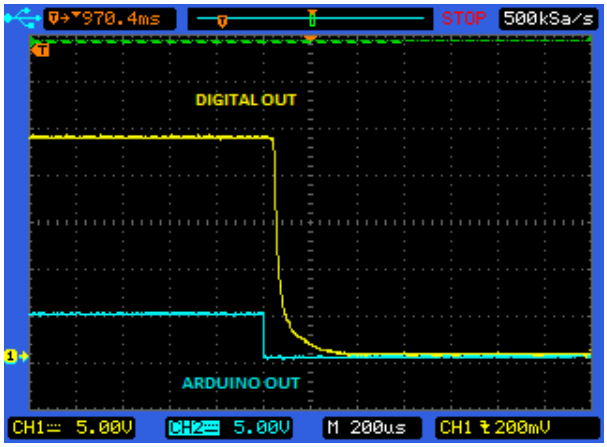

PWM Waveform:

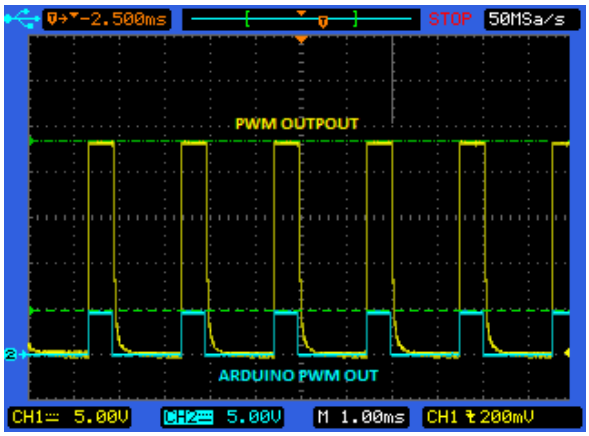

Analog Out Turn On:

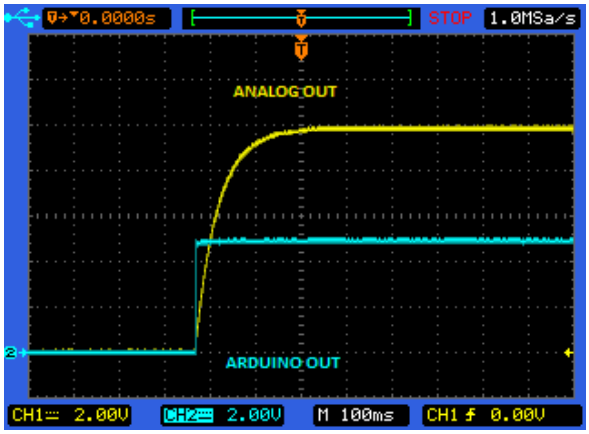

Analog Out Turn-Off:

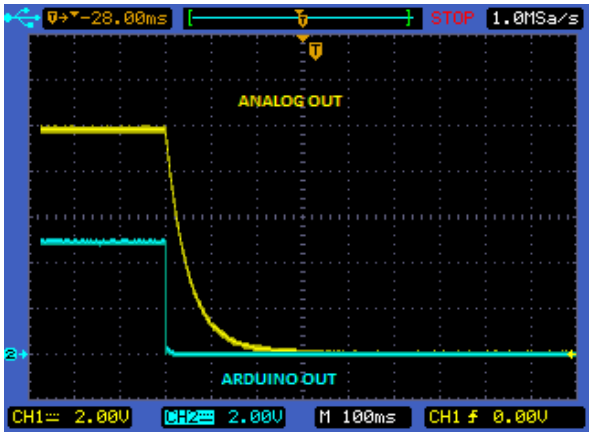

Analog /Digital input Turn-on:

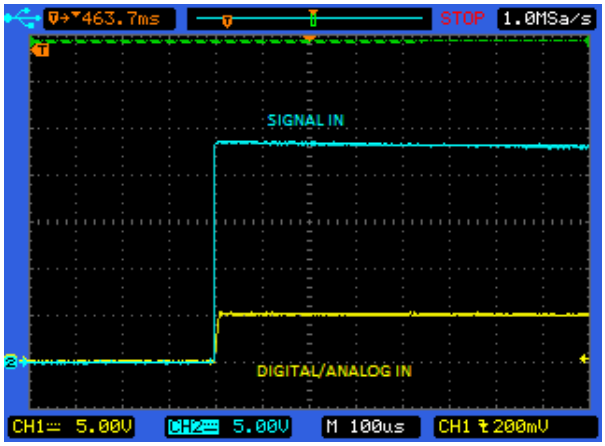

12 Typical Connections

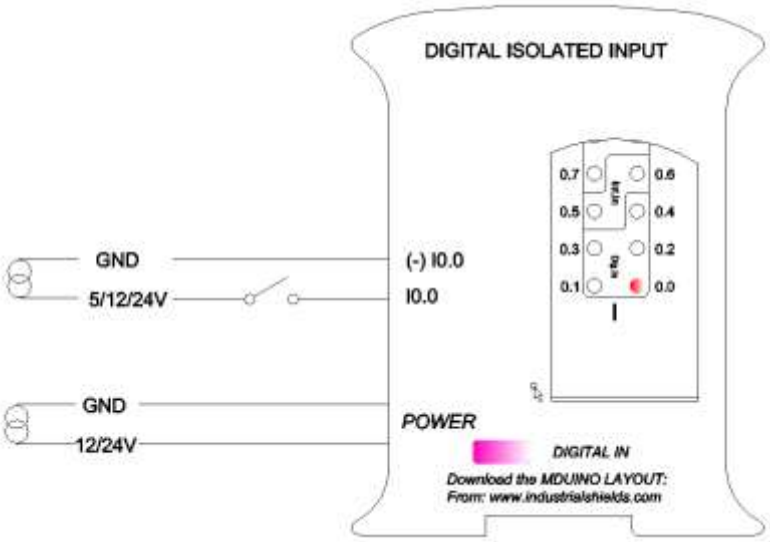

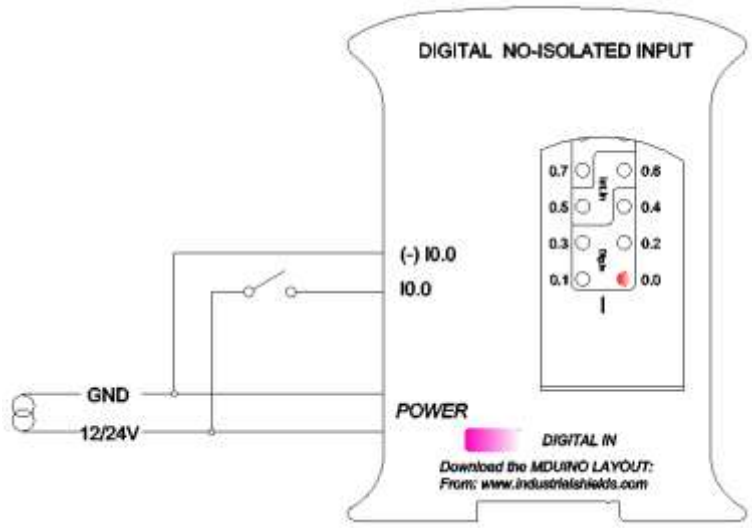

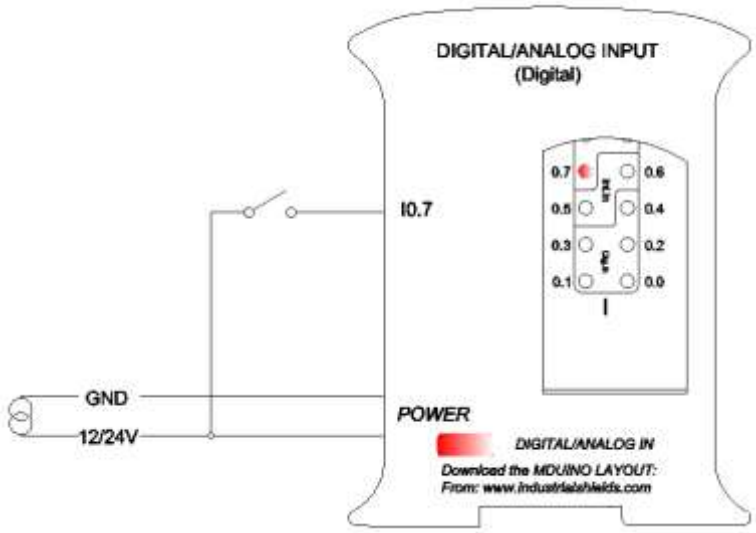

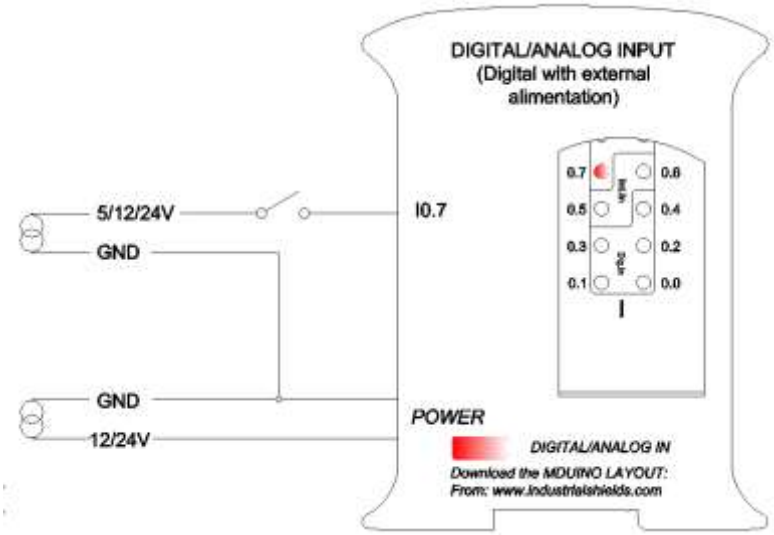
DIGITAL/ANALOG INPUT
(Digital with external
alimentation)
5/12/24V
GND
GND
12/24V
I0.7
POWER
DIGITAL/ANALOG IN
Download the MDUINO LAYOUT:
From: www.industrialshields.com
0.7
0.6
0.5
0.4
0.3
0.2
0.1
0.0
I

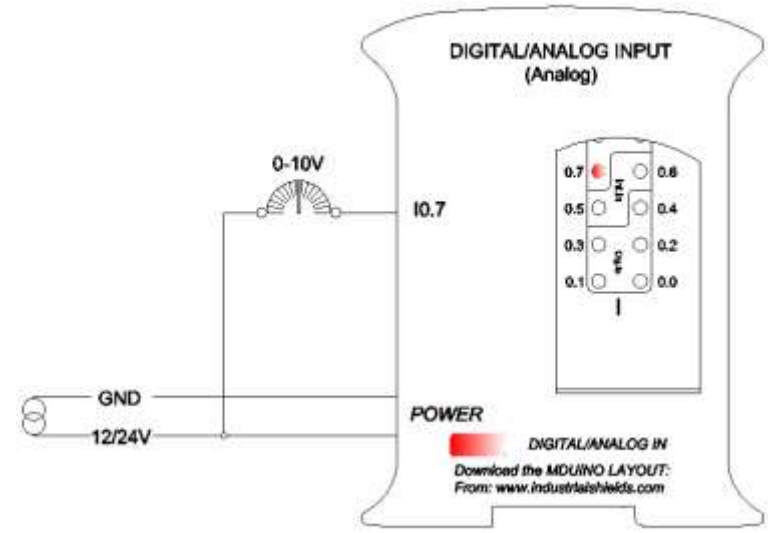
DIGITAL/ANALOG INPUT
(Analog)
0-10V
I0.7
GND
12/24V
POWER
DIGITAL/ANALOG IN
Download the MDUINO LAYOUT:
From: www.industrialshields.com
0.7
0.6
0.5
0.4
0.3
0.2
0.1
0.0
I

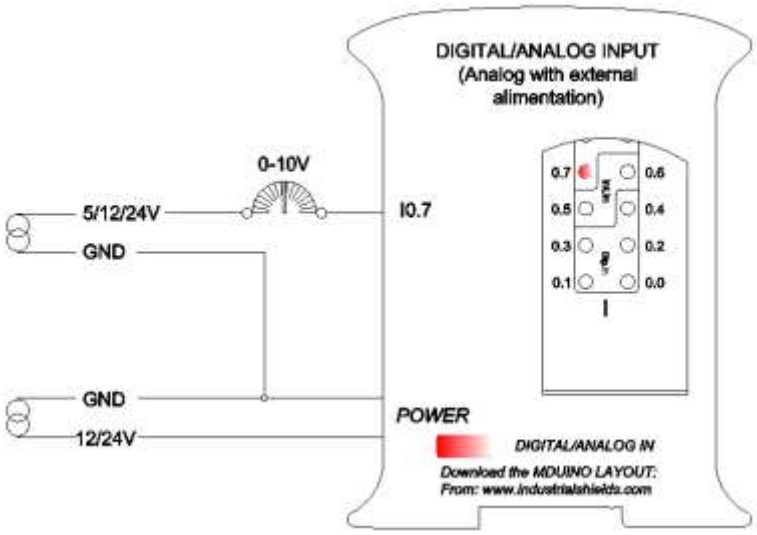
DIGITAL/ANALOG INPUT
(Analog with external
alimentation)
0-10V
5/12/24V
GND
GND
12/24V
I0.7
POWER
DIGITAL/ANALOG IN
Download the MDUINO LAYOUT:
From: www.industrialshields.com
0.7
0.6
0.5
0.4
0.3
0.2
0.1
0.0
I

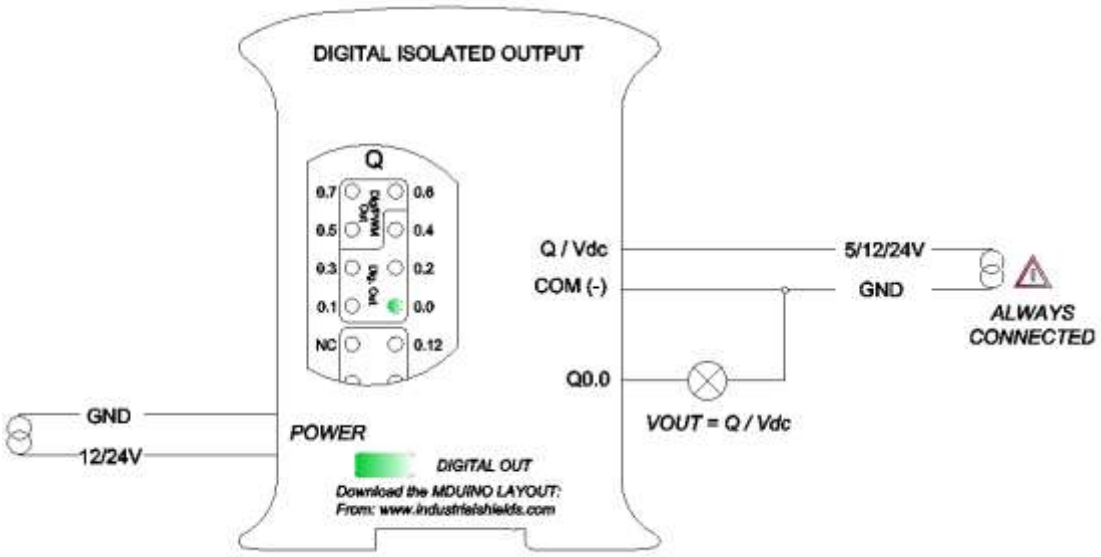
DIGITAL ISOLATED OUTPUT
Q
0.7
0.6
0.5
0.4
0.3
0.2
0.1
0.0
NC
0.12
Dig. Out
PWM Out
Q / Vdc
COM (-)
5/12/24V
GND
ALWAYS CONNECTED
Q0.0
VOUT = Q / Vdc
GND
12/24V
POWER
DIGITAL OUT
Download the MDUINO LAYOUT:
From: www.industrialshields.com

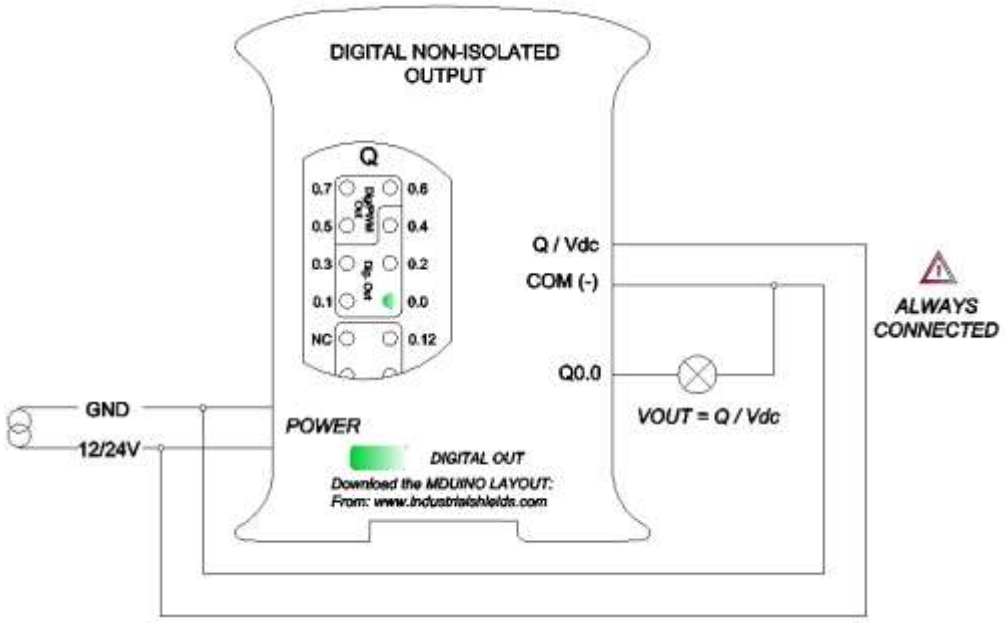
DIGITAL NON-ISOLATED OUTPUT
Q
0.7
0.6
0.5
0.4
0.3
0.2
0.1
0.0
NC
0.12
Dig. Out
PWM Out
Q / Vdc
COM (-)
ALWAYS CONNECTED
Q0.0
VOUT = Q / Vdc
GND
12/24V
POWER
DIGITAL OUT
Download the MDUINO LAYOUT:
From: www.industrialshields.com

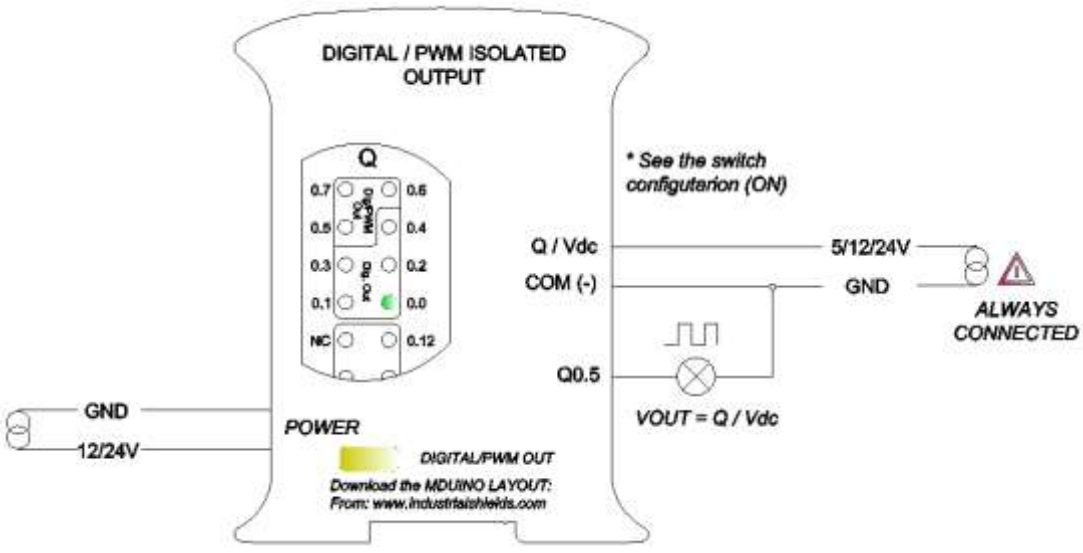
DIGITAL / PWM ISOLATED OUTPUT
Q
0.7
0.6
0.5
0.4
0.3
0.2
0.1
0.0
NC
0.12
Dig. Out
PWM Out
* See the switch configuration (ON)
Q / Vdc
COM (-)
5/12/24V
GND
ALWAYS CONNECTED
Q0.5
VOUT = Q / Vdc
GND
12/24V
POWER
DIGITAL/PWM OUT
Download the MDUINO LAYOUT:
From: www.industrialshields.com

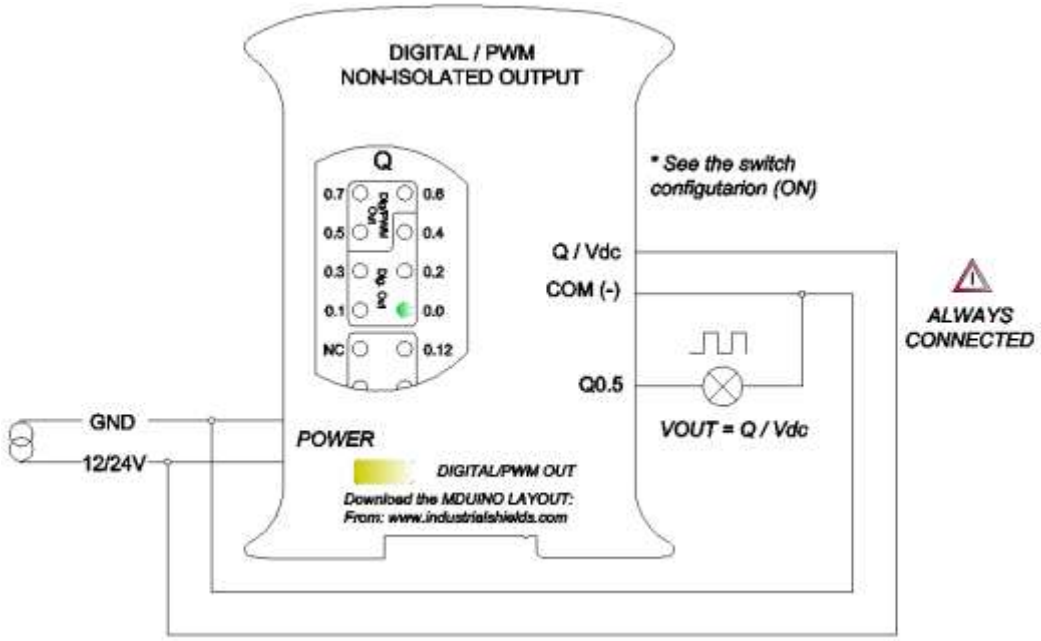
DIGITAL / PWM
NON-ISOLATED OUTPUT
Q
0.7
0.6
0.5
0.4
0.3
0.2
0.1
0.0
NC
0.12
Dig Out
PWM
* See the switch
configuration (ON)
Q / Vdc
COM (-)
Q0.5
VOUT = Q / Vdc
ALWAYS
CONNECTED
GND
12/24V
POWER
DIGITAL/PWM OUT
Download the MDUINO LAYOUT:
From: www.industrialshields.com

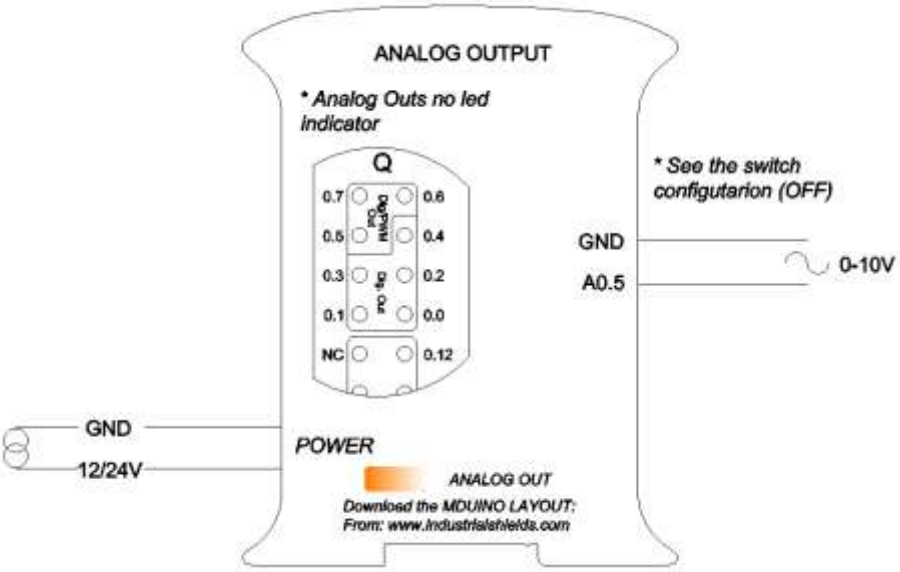
ANALOG OUTPUT
* Analog Outs no led
indicator
Q
0.7
0.6
0.5
0.4
0.3
0.2
0.1
0.0
NC
0.12
Dig Out
PWM
* See the switch
configuration (OFF)
GND
A0.5
0-10V
GND
12/24V
POWER
ANALOG OUT
Download the MDUINO LAYOUT:
From: www.industrialshields.com

13 Connector details:

The connector inside the PLCs that mounts on the PCB is MC 0,5/10-G-2,5 THT – 1963502 from Phoenix contact. MC0,5/10-G-2,5THT

For I/O and power supply there is a FK-MC 0,5/10-ST-2,5 - 1881406 connector from Phoenix contact. FK-MC 0,5/10-ST-2,5

Connection details:

Article reference	MC 0,5/10-G-2,5 THT
Height	8,1mm
Pitch	2,5mm
Dimension	22,5mm
Pin dimensions	0,8x0,8mm
Pin spacing	2,50mm

Article reference	FK-MC 0,5/10-ST-2,5
Rigid conduit section min.	0,14 mm²
Rigid conduit section max.	0,5 mm²
Flexible conduit section min.	0,14 mm²
Flexible conduit section max.	0,5 mm²
Conduit section AWG/kcmil min.	26
Conduit section AWG/kcmil max.	20

14 Mechanical Characteristics

- **Dimension GPRS/GSM Controller:**

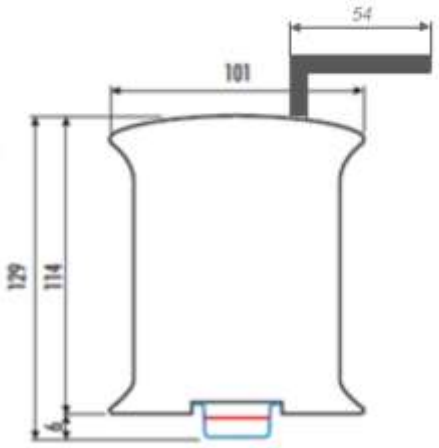

- **DIN Rail mounting**

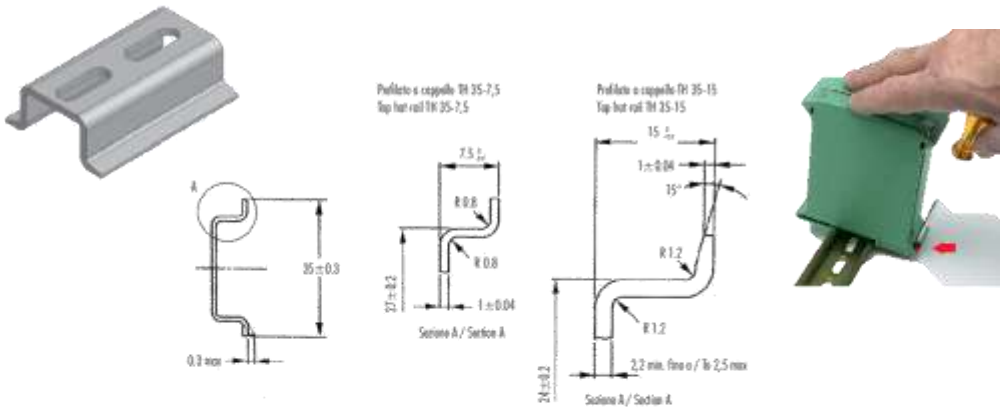

CARATTERISTICHE		METODO	UNITA' DI MISURA	BLEND PC/ABS
Meccaniche	Resistenza a trazione allo scorrimento	ASTM D638	MPa	68
	Resistenza a trazione a rottura	ASTM D638	MPa	48
	Allungamento a rottura	ASTM D638	%	59
	Modulo in flessione	ASTM D790	MPa	2094
	Prove Izod con intaglio	ISO 180/1A	KJ/m²	5.5
Termiche	Temp. di ammollimento Vicat, metodo B	ASTM D1525	°C	114
	Temperatura Ricotta 1.81 MPa	ASTM D648	°C	97
Fisiche	Peso specifico	ASTM D792	gr/cm3	1.21
	Ritiro nello stampo	ASTM D955	%	0.4/0.6
	Melt Flow Index 260°C - 90N	ASTM D1238	gr/10'	11.1
Comportamento alla Fiamma	Autoestinguenza (mm di spessore)	UL94	-	V-0 (0.8)
	Vib. Incandescente, 3.2 mm	IEC695.2.1	°C	960

Italtronic si riserva il diritto di modificare il materiale con cui realizza i propri prodotti senza obbligo di preavviso.

FEATURES		TEST METHOD	UNITS	BLEND PC/ABS
Mechanical test	Resistance to tensile stress at yield	ASTM D638	MPa	68
	Tensile strength	ASTM D638	MPa	48
	Ultimate elongation	ASTM D638	%	59
	Flexing modulus	ASTM D790	MPa	2094
	Izod test notched	ISO 180/1A	KJ/m²	5.5
Thermal test	Vicat softening temperature method B	ASTM D1525	°C	114
	Rebending temperature 1.81 MPa	ASTM D648	°C	97
Physical test	Specific gravity	ASTM D792	gr/cm3	1.21
	Mould shrinkage	ASTM D955	%	0.4/0.6
	Melt Flow Index 260°C - 90N	ASTM D1238	gr/10'	11.1
Flame test	Self extinguisher (thickness in mm)	UL94	-	V-0 (0.8)
	Incandescente flood 3.2 mm	IEC695.2.1	°C	960

Italtronic can operate any change of the materials without being obliged to forewarn.

About Industrial Shields:

Direction: Fàbrica del Pont, 1-11

Zip/Postal Code: 08272

City: Sant Fruitós de Bages (Barcelona)

Country: Spain

Telephone: (+34) 938 760 191 / (+34) 635 693 611

Mail: industrialshields@industrialshields.com