MX70-SC

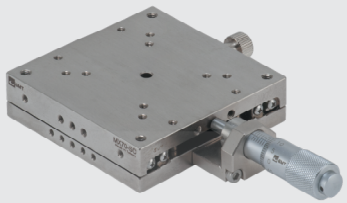

MX70-SS

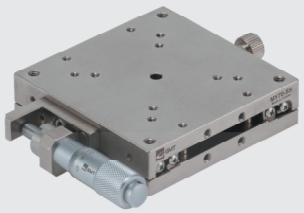

MY70-SC

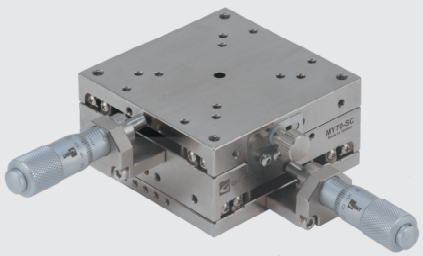

MY70-SS

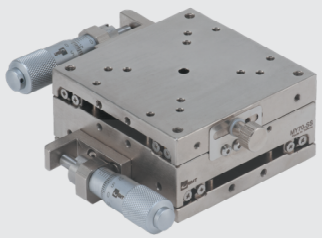

Specification

Unit: mm

Model no.	Table size	Axis	Feed position	Travel stroke	Micrometer minimum reading	Straightness accuracy	Allowable Loading (kgf)	Weight (kg)	Material	Surface finish
MX70-SC	70*70	X-axis	Central	±6.5	10μm	3μm	23	0.58	SUS 440C	Electroless nickel plating
MX70-SS			Side							
MY70-SC		XY-axis	Central				22.4	1.16		
MY70-SS			Side							

MX70-SC

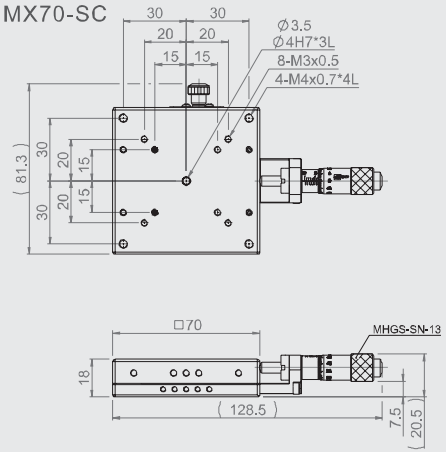

MX70-SS

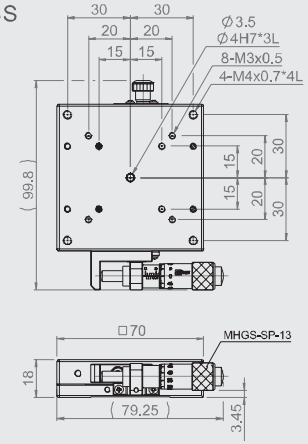

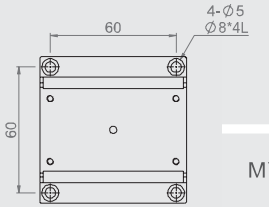

MX(Y)70-S
Mounting dimensions

MY70-SC

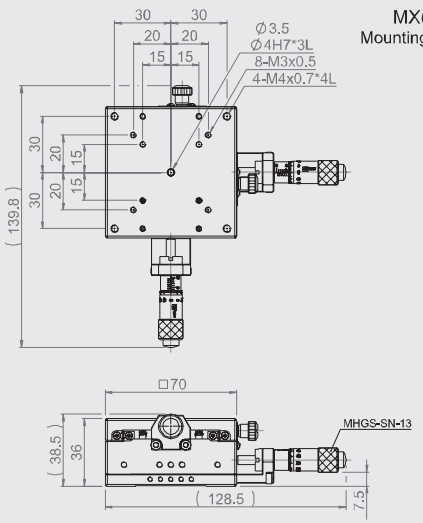
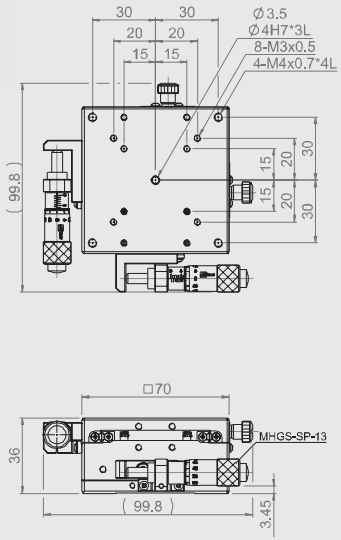
MY70-SS