MX70-SC-28

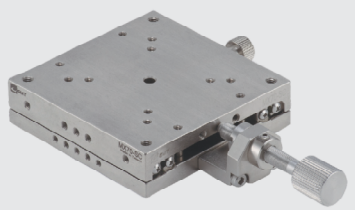

MX70-SS-28

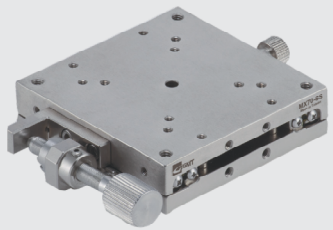

MY70-SC-28

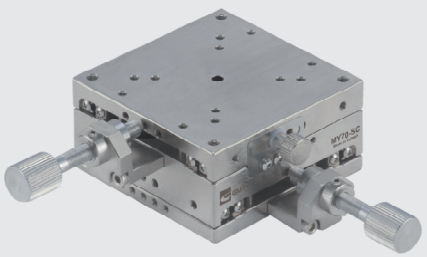

MY70-SS-28

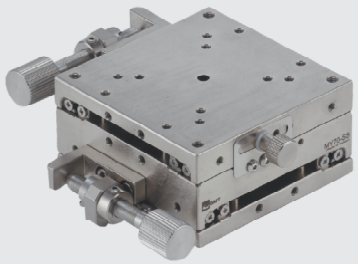

Specification

Unit: mm

Model no.	Table size	Axis	Feed position	Travel stroke	Movement per knob rotation	Straightness accuracy	Allowable Loading (kgf)	Weight (kg)	Material	Surface finish
MX70-SC-28	70*70	X-axis	Central	±6.5	0.5mm	3μm	23	0.58	SUS 440C	Electroless nickel plating
MX70-SS-28			Side							
MY70-SC-28		XY-axis	Central				22.4	1.16		
MY70-SS-28			Side							

Linear ball bearing stages (Feeding screw design) 70*70

MX70-SC-28

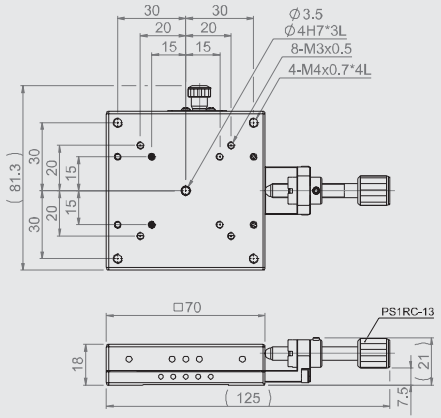

MX70-SS-28

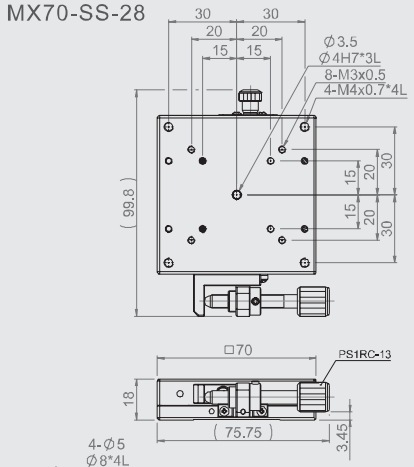

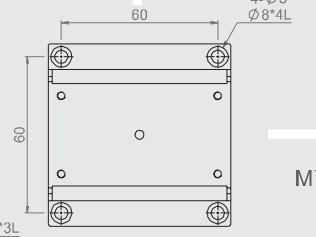

MX(Y)70-S-28
Mounting dimensions

MY70-SC-28

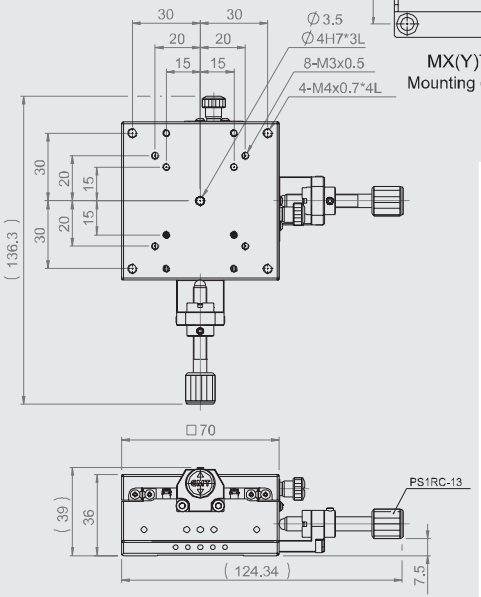
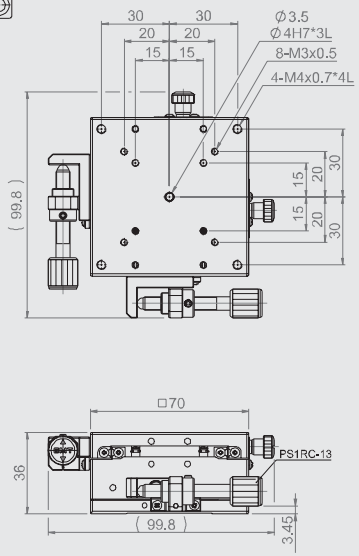
MY70-SS-28