Ezi-SERVO®

Closed Loop Stepping System

- Embedded Controller
- Position Table
- Closed Loop System
- No Gain Tuning / No Hunting
- High Resolution / Fast Response
- Heat Reduction / Torque Improvement

Plus-R

FASTECH

Fast, Accurate, Smooth Motion

FASTECH

Fast, Accurate, Smooth Motion

Ezi-SERVO® Plus-R

Closed Loop Stepping System

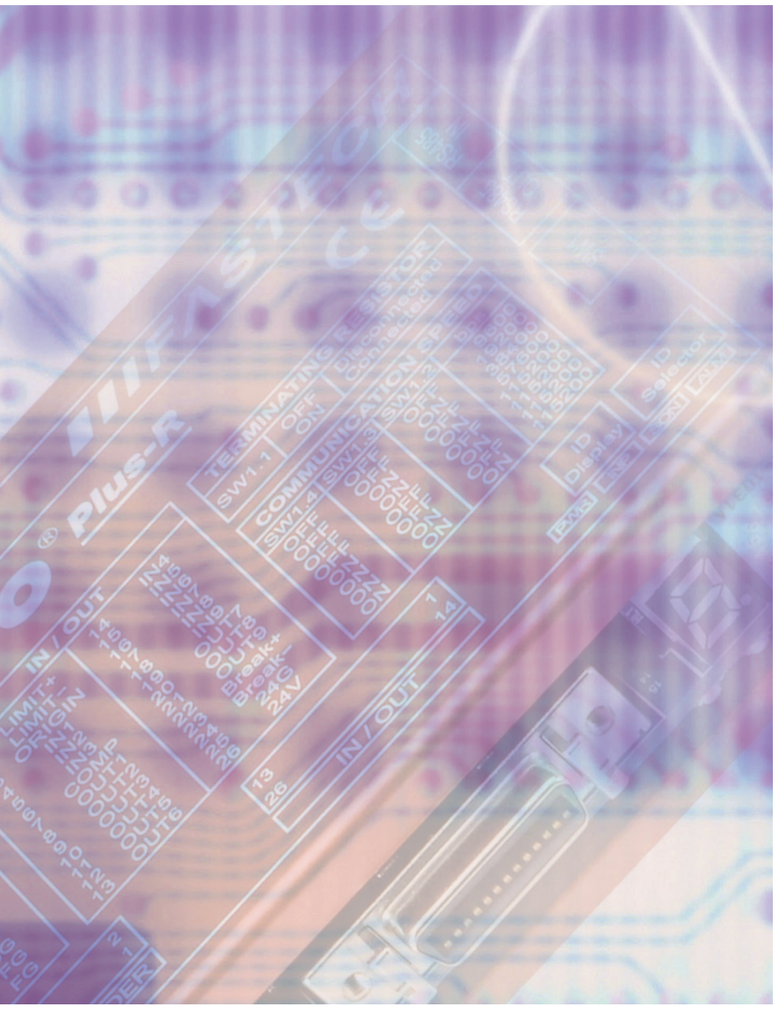

2 Position Table Function

Position Table can be used for motion control by digital input and output signals of host controller.
You can operate the motor directly by sending the position table number, start/stop, origin search and other digital input values from a PLC.
The PLC can monitor the In-Position, origin search, moving/stop, servo ready and other digital output signals from a drive. A maximum of 256 positioning points can be set from PLC.

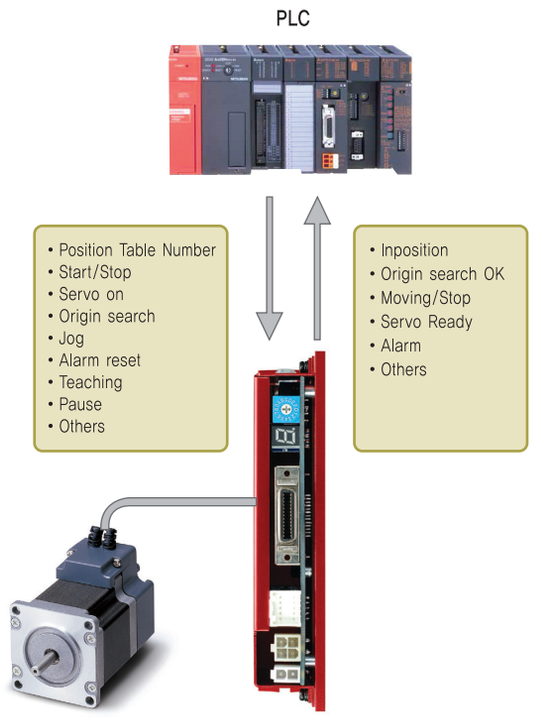

1 Network Based Motion Control

A maximum of 16 axis can be operated from a PC through RS-485 communications. All of the Motion conditions are set through the network and saved in Flash ROM as a parameter. Motion Library(DLL) is provided for programming under Windows XP/7/8/10.

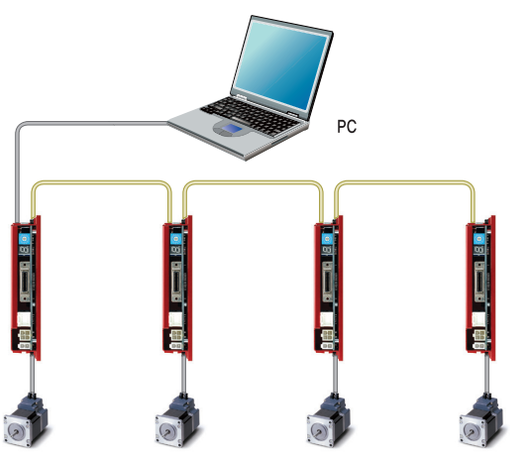

3 Closed Loop System

Ezi-SERVO is an innovative closed loop stepping system that utilizes a high-resolution motor mounted encoder constantly to monitor the current position. The encoder feedback allows the Ezi-SERVO to update the current position every 25 micro seconds. It allows the Ezi-SERVO drive to compensate for the loss of position, ensuring accurate positioning. For example, due to a sudden load change, a conventional stepper motor and drive could lose a step but Ezi-SERVO automatically correct the position by encoder feedback.

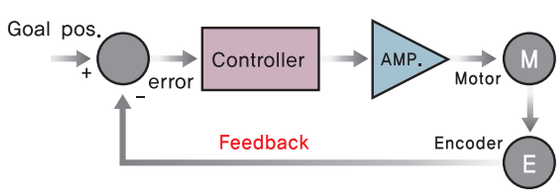

4 No Gain Tuning

To ensure machine performance, smoothness, positional error and low servo noise, Conventional servo systems require the adjustment of its servo's gains as an initial crucial step. Even systems that employ auto-tuning require manual tuning after the system is installed, especially if more that one axis are interdependent. Ezi-SERVO employs the best characteristics of stepper, closed loop motion controls and algorithms to eliminate the need of tedious gain tuning required for conventional closed loop servo systems. This means that Ezi-SERVO is optimized for the application and ready to work right out of the box. The Ezi-SERVO system employs the unique characteristics of the closed loop stepping motor control, eliminating these cumbersome steps and giving the engineer a high performance servo system without wasting setup time. Ezi-SERVO is especially well suited for low stiffness loads (for example, a belt and pulley system) that sometime require conventional servo systems to inertia match with the additimal expensive and bulky gearbox. Ezi-SERVO also performs exceptionally, even under heavy loads and high speeds.

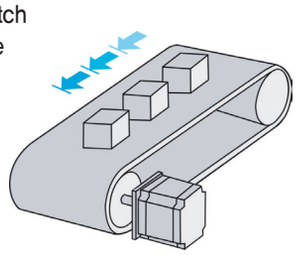

5 Heat Reduction / Energy Saving

(Motor Current Control according to load)

Ezi-SERVO automatically controls motor current according to load. Ezi-SERVO reduces motor current when motor load is low, and increases motor current when load is high. By optimizing the motor current, motor heat can be minimized and energy can be saved.

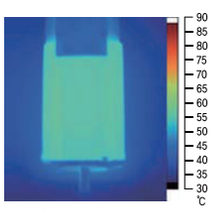

Motor temperature [Measured by Thermal Imaging Camera]

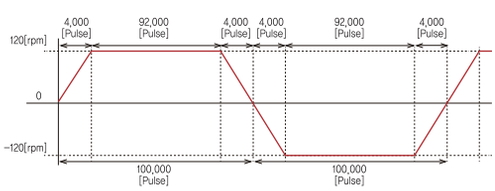

Condition to measure the motor temperature
[4hours operation, Motor surface temperature saturation]

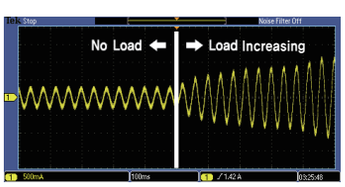

Example of the Motor Current Control according to load

6 Torque Improvement

(Motor Voltage Increasing and Motor Current Setting)

Ezi-SERVO boosts the voltage supplied to the motor by internal DC-DC Converter. The torque at the high speed is increased. In addition, it is possible to set the Run current up to 150%, whereby the torque at low speed is increased.

Torque can be improved by about 30% over the entire speed range.

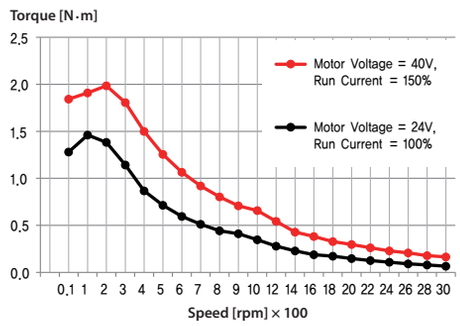

※ The torque at low speed and high speed is improved about 30%.

Measured Condition : Drive = Ezi-SERVO-PR-56L
Motor Voltage = 40VDC
Input Voltage = 24VDC

7 No Hunting

Traditional servo motor drives overshoot their position and try to correct overshooting by moving the opposite direction, especially in high gain applications. This is called null hunt and is especially prevalent in systems that the break away or static friction is significantly higher than the running friction. The cure is lowering the gain, which affects accuracy or using Ezi-SERVO Motion Control System. Ezi-SERVO utilizes the unique characteristics of stepping motors and locks itself into the desired target position, eliminating Null Hunt. This feature is especially useful in applications such as nanotech manufacturing, semiconductor fabrication, vision systems and ink jet printing in which system oscillation and vibration could be a problem.

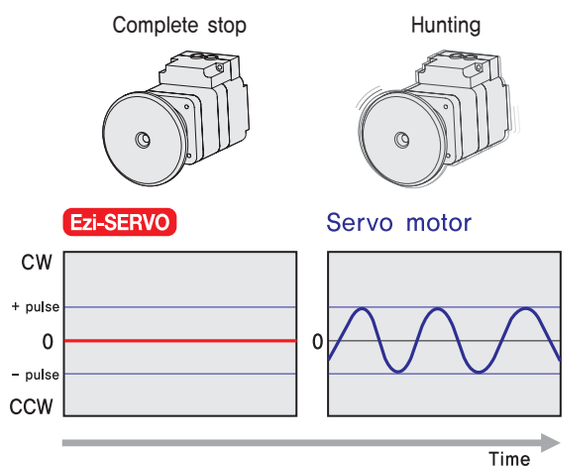

8 Smooth and Accurate

Ezi-SERVO is a high-precision servo drive, using a high-resolution encoder with 32,000 pulses/revolution. Unlike a conventional Microstep drive, the on-board high performance DSP (Digital Signal Processor) performs vector control and filtering, producing a smooth rotational control with minimum ripples.

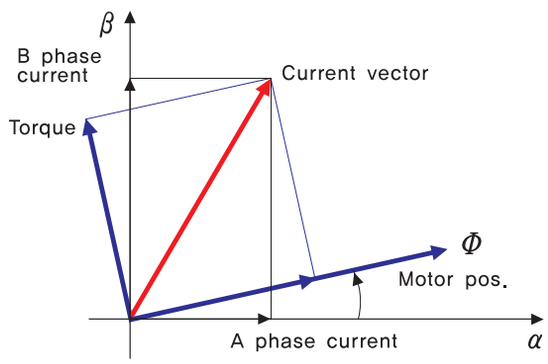

9 Fast Response

Similar to conventional stepping motors, Ezi-SERVO instantly synchronizes with command pulses providing fast positional response. Ezi-SERVO is the optimum choice when zero-speed stability and rapid motions within a short distance are required. Traditional servo motor systems have a natural delay called settling time between the command input signals and the resultant motion because of the constant monitoring of the current position.

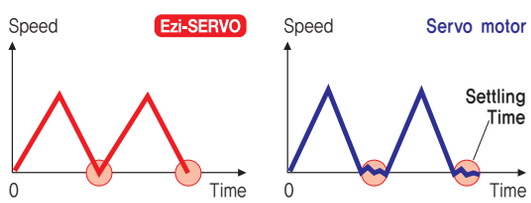

10 High Resolution

The unit of the position command can be divided precisely.

(Max. 32,000 pulses/revolution)

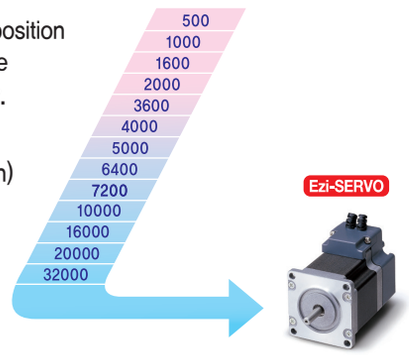

11 High Torque

Compared with common step motors and drives, Ezi-SERVO motion control systems can maintain a high torque state over relatively long period of time. This means that Ezi-SERVO continuously operates without loss of position under 100% of the load. Unlike conventional Microstep drives, Ezi-SERVO exploits continuous high torque operation during high speed motion due to its innovative optimum current phase control.

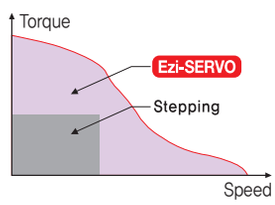

12 High Speed

The Ezi-SERVO operates well at high speed without the loss of synchronism or positioning error. Ezi-SERVO's ability of continuous current position monitoring of enables the stepping motor to generate high torque, even under a 100% load condition.

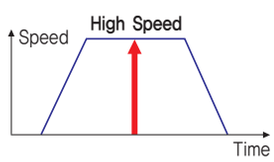

● Advantages over Open-Loop Control Stepping Drive

1. Reliable positioning without loss of synchronism.
2. Holding stable position and automatically recovering to the original position even after experiencing positioning error due to external forces, such as mechanical vibration or vertical positional holding.
3. Ezi-SERVO utilizes 100% of the full range of rated motor torque, contrary to a conventional open-loop stepping driver that can use up to 50% of the rated motor torque due to the loss of synchronism.
4. Capability to operate at high speed due to load-dependant current control, open-loop stepping drivers use a constant current control at all speed ranges without considering load varitions.

● Advantages over Servo Motor Controller

1. No gain tuning. (Automatic gain adjustment in response to a load change)
2. Maintains the stable holding position without oscillation after completion of positioning.
3. Fast positioning due to the independent control by on-board DSP.
4. Continuous operation during rapid short-stroke movement due to instantaneous positioning.

● Features of Motion Controller

1. Loop Count

This function allows positioning repeatedly according to the Loop Count Number.

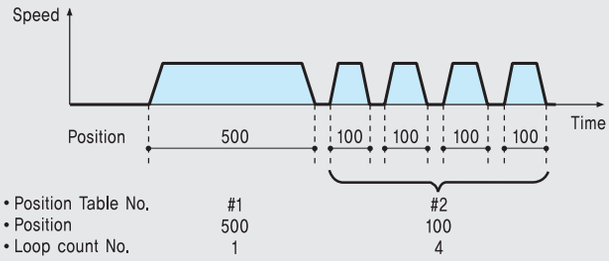

2. Acceleration/Deceleration

For quick acceleration and gradual deceleration, you can set each acceleration and deceleration time separately.

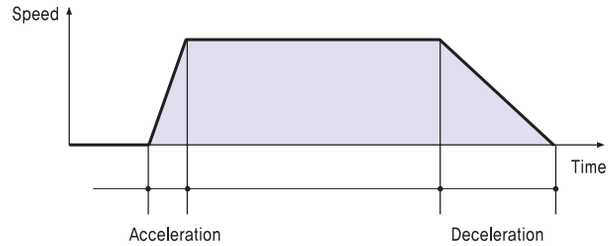

3. Pause

You can pause the motion upon the input of an external signal. When Pause signal change to OFF, the motor will restart to original target position.

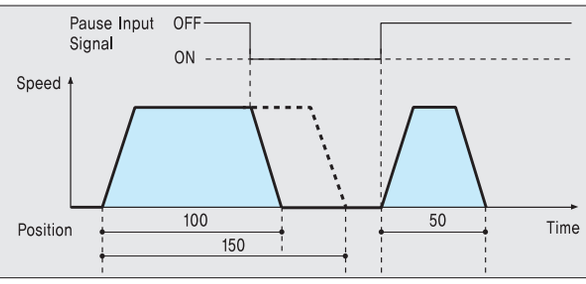

4. Alarm

The number of LED flashing time indicates which Alarm has occurred.

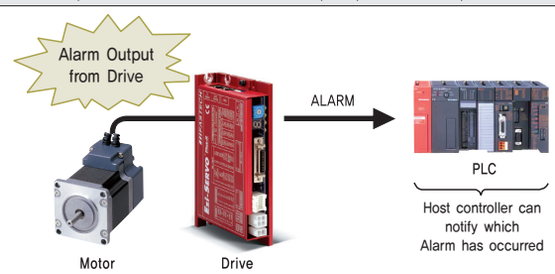

5. Teaching

Teaching signal is used to memorize current Position data into the selected Position Table item.

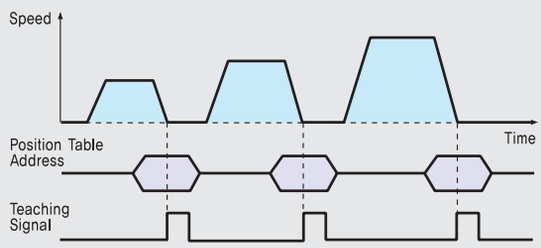

6. Jump

Within one Position Table, you can select various Position Table numbers that you want to jump. With three external input signal during movement, the next jump Position Table number can be select.

◆ Position Table #14

Position	– – –	Next	– – –	Input 1	Input 2	Input 3	– – –
10000		100		115	116	117	

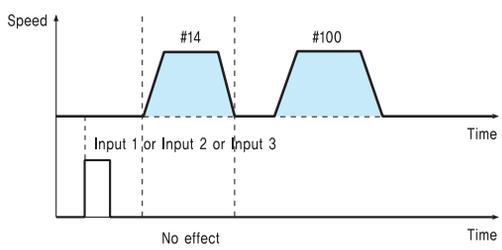

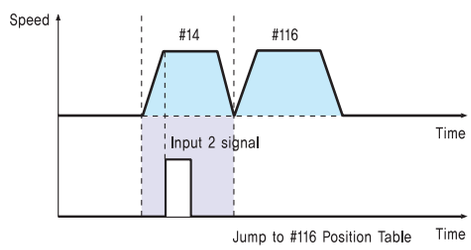

● Ezi-SERVO Plus-R Part Numbering

Ezi-SERVO-PR-56L-A-BK-PN05-□

Product Name

Drive Series Type

PR : Plus RS-485

Motor Flange Size

20 : 20mm
28 : 28mm
35 : 35mm
42 : 42mm
56 : 56mm
60 : 60mm
86 : 86mm

Motor Length

S : Small
M : Medium
L : Large
XL : Extra Large

Encoder Resolution

A : 10,000[ppr]
B : 20,000[ppr]
C : 32,000[ppr]
D : 16,000[ppr]
F : 4,000[ppr]

Brake

Blank : Without Brake
BK : Brake

Reduction Gear Ratio

Blank – Without Gear
PN03 – 1:3
PN05 – 1:5
PN08 – 1:8
PN10 – 1:10
PN15 – 1:15
PN25 – 1:25
PN40 – 1:40
PN50 – 1:50

User Code

● Standard Combination

Unit Part Number	Motor Model Number	Drive Model Number
Ezi-SERVO-PR-20M-F	EzM-20M-F	EzS-NDR-20M-F
Ezi-SERVO-PR-20L-F	EzM-20L-F	EzS-NDR-20L-F
Ezi-SERVO-PR-28S-D	EzM-28S-D	EzS-NDR-28S-D
Ezi-SERVO-PR-28SM-D	EzM-28SM-D	EzS-NDR-28S-D
Ezi-SERVO-PR-28M-D	EzM-28M-D	EzS-NDR-28M-D
Ezi-SERVO-PR-28MM-D	EzM-28MM-D	EzS-NDR-28M-D
Ezi-SERVO-PR-28L-D	EzM-28L-D	EzS-NDR-28L-D
Ezi-SERVO-PR-28LM-D	EzM-28LM-D	EzS-NDR-28L-D
Ezi-SERVO-PR-35M-D	EzM-35M-D	EzS-NDR-35M-D
Ezi-SERVO-PR-35MM-D	EzM-35MM-D	EzS-NDR-35M-D
Ezi-SERVO-PR-35L-D	EzM-35L-D	EzS-NDR-35L-D
Ezi-SERVO-PR-35LM-D	EzM-35LM-D	EzS-NDR-35L-D
Ezi-SERVO-PR-42S-A	EzM-42S-A	EzS-NDR-42S-A
Ezi-SERVO-PR-42S-B	EzM-42S-B	EzS-NDR-42S-B
Ezi-SERVO-PR-42S-C	EzM-42S-C	EzS-NDR-42S-C
Ezi-SERVO-PR-42M-A	EzM-42M-A	EzS-NDR-42M-A
Ezi-SERVO-PR-42M-B	EzM-42M-B	EzS-NDR-42M-B
Ezi-SERVO-PR-42M-C	EzM-42M-C	EzS-NDR-42M-C
Ezi-SERVO-PR-42L-A	EzM-42L-A	EzS-NDR-42L-A
Ezi-SERVO-PR-42L-B	EzM-42L-B	EzS-NDR-42L-B
Ezi-SERVO-PR-42L-C	EzM-42L-C	EzS-NDR-42L-C
Ezi-SERVO-PR-42XL-A	EzM-42XL-A	EzS-NDR-42XL-A
Ezi-SERVO-PR-42XL-B	EzM-42XL-B	EzS-NDR-42XL-B
Ezi-SERVO-PR-42XL-C	EzM-42XL-C	EzS-NDR-42XL-C
Ezi-SERVO-PR-56S-A	EzM-56S-A	EzS-NDR-56S-A
Ezi-SERVO-PR-56S-B	EzM-56S-B	EzS-NDR-56S-B
Ezi-SERVO-PR-56S-C	EzM-56S-C	EzS-NDR-56S-C
Ezi-SERVO-PR-56M-A	EzM-56M-A	EzS-NDR-56M-A
Ezi-SERVO-PR-56M-B	EzM-56M-B	EzS-NDR-56M-B
Ezi-SERVO-PR-56M-C	EzM-56M-C	EzS-NDR-56M-C
Ezi-SERVO-PR-56L-A	EzM-56L-A	EzS-NDR-56L-A
Ezi-SERVO-PR-56L-B	EzM-56L-B	EzS-NDR-56L-B
Ezi-SERVO-PR-56L-C	EzM-56L-C	EzS-NDR-56L-C
Ezi-SERVO-PR-60S-A	EzM-60S-A	EzS-NDR-60S-A
Ezi-SERVO-PR-60S-B	EzM-60S-B	EzS-NDR-60S-B
Ezi-SERVO-PR-60S-C	EzM-60S-C	EzS-NDR-60S-C
Ezi-SERVO-PR-60M-A	EzM-60M-A	EzS-NDR-60M-A
Ezi-SERVO-PR-60M-B	EzM-60M-B	EzS-NDR-60M-B
Ezi-SERVO-PR-60M-C	EzM-60M-C	EzS-NDR-60M-C
Ezi-SERVO-PR-60L-A	EzM-60L-A	EzS-NDR-60L-A
Ezi-SERVO-PR-60L-B	EzM-60L-B	EzS-NDR-60L-B
Ezi-SERVO-PR-60L-C	EzM-60L-C	EzS-NDR-60L-C
Ezi-SERVO-PR-86M-A	EzM-86M-A	EzS-NDR-86M-A
Ezi-SERVO-PR-86M-B	EzM-86M-B	EzS-NDR-86M-B
Ezi-SERVO-PR-86M-C	EzM-86M-C	EzS-NDR-86M-C
Ezi-SERVO-PR-86L-A	EzM-86L-A	EzS-NDR-86L-A
Ezi-SERVO-PR-86L-B	EzM-86L-B	EzS-NDR-86L-B
Ezi-SERVO-PR-86L-C	EzM-86L-C	EzS-NDR-86L-C
Ezi-SERVO-PR-86XL-A	EzM-86XL-A	EzS-NDR-86XL-A
Ezi-SERVO-PR-86XL-B	EzM-86XL-B	EzS-NDR-86XL-B
Ezi-SERVO-PR-86XL-C	EzM-86XL-C	EzS-NDR-86XL-B

* When places an order for Stopper type 28mm, 35mm motor, please write "M" additionally after motor length of unit part number.
(Ex: Ezi-SERVO-PR-28LM-D, Ezi-SERVO-PR-35LM-D)

● Combination with Brake

Unit Part Number	Motor Model Number	Drive Model Number
Ezi-SERVO-PR-42S-A-BK	EzM-42S-A-BK	EzS-NDR-42S-A
Ezi-SERVO-PR-42S-B-BK	EzM-42S-B-BK	EzS-NDR-42S-B
Ezi-SERVO-PR-42M-A-BK	EzM-42M-A-BK	EzS-NDR-42M-A
Ezi-SERVO-PR-42M-B-BK	EzM-42M-B-BK	EzS-NDR-42M-B
Ezi-SERVO-PR-42L-A-BK	EzM-42L-A-BK	EzS-NDR-42L-A
Ezi-SERVO-PR-42L-B-BK	EzM-42L-B-BK	EzS-NDR-42L-B
Ezi-SERVO-PR-42XL-A-BK	EzM-42XL-A-BK	EzS-NDR-42XL-A
Ezi-SERVO-PR-42XL-B-BK	EzM-42XL-B-BK	EzS-NDR-42XL-B
Ezi-SERVO-PR-56S-A-BK	EzM-56S-A-BK	EzS-NDR-56S-A
Ezi-SERVO-PR-56S-B-BK	EzM-56S-B-BK	EzS-NDR-56S-B
Ezi-SERVO-PR-56M-A-BK	EzM-56M-A-BK	EzS-NDR-56M-A
Ezi-SERVO-PR-56M-B-BK	EzM-56M-B-BK	EzS-NDR-56M-B
Ezi-SERVO-PR-56L-A-BK	EzM-56L-A-BK	EzS-NDR-56L-A
Ezi-SERVO-PR-56L-B-BK	EzM-56L-B-BK	EzS-NDR-56L-B
Ezi-SERVO-PR-60S-A-BK	EzM-60S-A-BK	EzS-NDR-60S-A
Ezi-SERVO-PR-60S-B-BK	EzM-60S-B-BK	EzS-NDR-60S-B
Ezi-SERVO-PR-60M-A-BK	EzM-60M-A-BK	EzS-NDR-60M-A
Ezi-SERVO-PR-60M-B-BK	EzM-60M-B-BK	EzS-NDR-60M-B
Ezi-SERVO-PR-60L-A-BK	EzM-60L-A-BK	EzS-NDR-60L-A
Ezi-SERVO-PR-60L-B-BK	EzM-60L-B-BK	EzS-NDR-60L-B
Ezi-SERVO-PR-86M-A-BK	EzM-86M-A-BK	EzS-NDR-86M-A
Ezi-SERVO-PR-86M-B-BK	EzM-86M-B-BK	EzS-NDR-86M-B
Ezi-SERVO-PR-86L-A-BK	EzM-86L-A-BK	EzS-NDR-86L-A
Ezi-SERVO-PR-86L-B-BK	EzM-86L-B-BK	EzS-NDR-86L-B
Ezi-SERVO-PR-86XL-A-BK	EzM-86XL-A-BK	EzS-NDR-86XL-A
Ezi-SERVO-PR-86XL-B-BK	EzM-86XL-B-BK	EzS-NDR-86XL-B

● Combination with Gearbox

Unit Part Number	Motor Model Number	Drive Model Number	Reduction gear ratio
Ezi-SERVO-PR-42S-A-PN3	EzM-42S-A-PN3	EzS-NDR-42S-A	1:3
Ezi-SERVO-PR-42S-B-PN3	EzM-42S-B-PN3	EzS-NDR-42S-B	
Ezi-SERVO-PR-42S-A-PN5	EzM-42S-A-PN5	EzS-NDR-42S-A	1:5
Ezi-SERVO-PR-42S-B-PN5	EzM-42S-B-PN5	EzS-NDR-42S-B	
Ezi-SERVO-PR-42S-A-PN8	EzM-42S-A-PN8	EzS-NDR-42S-A	1:8
Ezi-SERVO-PR-42S-B-PN8	EzM-42S-B-PN8	EzS-NDR-42S-B	
Ezi-SERVO-PR-42S-A-PN10	EzM-42S-A-PN10	EzS-NDR-42S-A	1:10
Ezi-SERVO-PR-42S-B-PN10	EzM-42S-B-PN10	EzS-NDR-42S-B	
Ezi-SERVO-PR-42S-A-PN15	EzM-42S-A-PN15	EzS-NDR-42S-A	1:15
Ezi-SERVO-PR-42S-B-PN15	EzM-42S-B-PN15	EzS-NDR-42S-B	
Ezi-SERVO-PR-42S-A-PN25	EzM-42S-A-PN25	EzS-NDR-42S-A	1:25
Ezi-SERVO-PR-42S-B-PN25	EzM-42S-B-PN25	EzS-NDR-42S-B	
Ezi-SERVO-PR-42S-A-PN40	EzM-42S-A-PN40	EzS-NDR-42S-A	1:40
Ezi-SERVO-PR-42S-B-PN40	EzM-42S-B-PN40	EzS-NDR-42S-B	
Ezi-SERVO-PR-42S-A-PN50	EzM-42S-A-PN50	EzS-NDR-42S-A	1:50
Ezi-SERVO-PR-42S-B-PN50	EzM-42S-B-PN50	EzS-NDR-42S-B	
Ezi-SERVO-PR-42M-A-PN3	EzM-42M-A-PN3	EzS-NDR-42M-A	1:3
Ezi-SERVO-PR-42M-B-PN3	EzM-42M-B-PN3	EzS-NDR-42M-B	
Ezi-SERVO-PR-42M-A-PN5	EzM-42M-A-PN5	EzS-NDR-42M-A	1:5
Ezi-SERVO-PR-42M-B-PN5	EzM-42M-B-PN5	EzS-NDR-42M-B	
Ezi-SERVO-PR-42M-A-PN8	EzM-42M-A-PN8	EzS-NDR-42M-A	1:8
Ezi-SERVO-PR-42M-B-PN8	EzM-42M-B-PN8	EzS-NDR-42M-B	
Ezi-SERVO-PR-42M-A-PN10	EzM-42M-A-PN10	EzS-NDR-42M-A	1:10
Ezi-SERVO-PR-42M-B-PN10	EzM-42M-B-PN10	EzS-NDR-42M-B	
Ezi-SERVO-PR-42M-A-PN15	EzM-42M-A-PN15	EzS-NDR-42M-A	1:15
Ezi-SERVO-PR-42M-B-PN15	EzM-42M-B-PN15	EzS-NDR-42M-B	
Ezi-SERVO-PR-42M-A-PN25	EzM-42M-A-PN25	EzS-NDR-42M-A	1:25
Ezi-SERVO-PR-42M-B-PN25	EzM-42M-B-PN25	EzS-NDR-42M-B	
Ezi-SERVO-PR-42M-A-PN40	EzM-42M-A-PN40	EzS-NDR-42M-A	1:40
Ezi-SERVO-PR-42M-B-PN40	EzM-42M-B-PN40	EzS-NDR-42M-B	
Ezi-SERVO-PR-42M-A-PN50	EzM-42M-A-PN50	EzS-NDR-42M-A	1:50
Ezi-SERVO-PR-42M-B-PN50	EzM-42M-B-PN50	EzS-NDR-42M-B	

● Combination with Gearbox

Unit Part Number	Motor Model Number	Drive Model Number	Reduction gear ratio
Ezi-SERVO-PR-42L-A-PN3	EzM-42L-A-PN3	EzS-NDR-42L-A	1:3
Ezi-SERVO-PR-42L-B-PN3	EzM-42L-B-PN3	EzS-NDR-42L-B	
Ezi-SERVO-PR-42L-A-PN5	EzM-42L-A-PN5	EzS-NDR-42L-A	1:5
Ezi-SERVO-PR-42L-B-PN5	EzM-42L-B-PN5	EzS-NDR-42L-B	
Ezi-SERVO-PR-42L-A-PN8	EzM-42L-A-PN8	EzS-NDR-42L-A	1:8
Ezi-SERVO-PR-42L-B-PN8	EzM-42L-B-PN8	EzS-NDR-42L-B	
Ezi-SERVO-PR-42L-A-PN10	EzM-42L-A-PN10	EzS-NDR-42L-A	1:10
Ezi-SERVO-PR-42L-B-PN10	EzM-42L-B-PN10	EzS-NDR-42L-B	
Ezi-SERVO-PR-42L-A-PN15	EzM-42L-A-PN15	EzS-NDR-42L-A	1:15
Ezi-SERVO-PR-42L-B-PN15	EzM-42L-B-PN15	EzS-NDR-42L-B	
Ezi-SERVO-PR-42L-A-PN25	EzM-42L-A-PN25	EzS-NDR-42L-A	1:25
Ezi-SERVO-PR-42L-B-PN25	EzM-42L-B-PN25	EzS-NDR-42L-B	
Ezi-SERVO-PR-42L-A-PN40	EzM-42L-A-PN40	EzS-NDR-42L-A	1:40
Ezi-SERVO-PR-42L-B-PN40	EzM-42L-B-PN40	EzS-NDR-42L-B	
Ezi-SERVO-PR-42L-A-PN50	EzM-42L-A-PN50	EzS-NDR-42L-A	1:50
Ezi-SERVO-PR-42L-B-PN50	EzM-42L-B-PN50	EzS-NDR-42L-B	
Ezi-SERVO-PR-42XL-A-PN3	EzM-42XL-A-PN3	EzS-NDR-42XL-A	1:3
Ezi-SERVO-PR-42XL-B-PN3	EzM-42XL-B-PN3	EzS-NDR-42XL-B	
Ezi-SERVO-PR-42XL-A-PN5	EzM-42XL-A-PN5	EzS-NDR-42XL-A	1:5
Ezi-SERVO-PR-42XL-B-PN5	EzM-42XL-B-PN5	EzS-NDR-42XL-B	
Ezi-SERVO-PR-42XL-A-PN8	EzM-42XL-A-PN8	EzS-NDR-42XL-A	1:8
Ezi-SERVO-PR-42XL-B-PN8	EzM-42XL-B-PN8	EzS-NDR-42XL-B	
Ezi-SERVO-PR-42XL-A-PN10	EzM-42XL-A-PN10	EzS-NDR-42XL-A	1:10
Ezi-SERVO-PR-42XL-B-PN10	EzM-42XL-B-PN10	EzS-NDR-42XL-B	
Ezi-SERVO-PR-42XL-A-PN15	EzM-42XL-A-PN15	EzS-NDR-42XL-A	1:15
Ezi-SERVO-PR-42XL-B-PN15	EzM-42XL-B-PN15	EzS-NDR-42XL-B	
Ezi-SERVO-PR-42XL-A-PN25	EzM-42XL-A-PN25	EzS-NDR-42XL-A	1:25
Ezi-SERVO-PR-42XL-B-PN25	EzM-42XL-B-PN25	EzS-NDR-42XL-B	
Ezi-SERVO-PR-42XL-A-PN40	EzM-42XL-A-PN40	EzS-NDR-42XL-A	1:40
Ezi-SERVO-PR-42XL-B-PN40	EzM-42XL-B-PN40	EzS-NDR-42XL-B	
Ezi-SERVO-PR-42XL-A-PN50	EzM-42XL-A-PN50	EzS-NDR-42XL-A	1:50
Ezi-SERVO-PR-42XL-B-PN50	EzM-42XL-B-PN50	EzS-NDR-42XL-B	
Ezi-SERVO-PR-56S-A-PN3	EzM-56S-A-PN3	EzS-NDR-56S-A	1:3
Ezi-SERVO-PR-56S-B-PN3	EzM-56S-B-PN3	EzS-NDR-56S-B	
Ezi-SERVO-PR-56S-A-PN5	EzM-56S-A-PN5	EzS-NDR-56S-A	1:5
Ezi-SERVO-PR-56S-B-PN5	EzM-56S-B-PN5	EzS-NDR-56S-B	
Ezi-SERVO-PR-56S-A-PN8	EzM-56S-A-PN8	EzS-NDR-56S-A	1:8
Ezi-SERVO-PR-56S-B-PN8	EzM-56S-B-PN8	EzS-NDR-56S-B	
Ezi-SERVO-PR-56S-A-PN10	EzM-56S-A-PN10	EzS-NDR-56S-A	1:10
Ezi-SERVO-PR-56S-B-PN10	EzM-56S-B-PN10	EzS-NDR-56S-B	
Ezi-SERVO-PR-56S-A-PN15	EzM-56S-A-PN15	EzS-NDR-56S-A	1:15
Ezi-SERVO-PR-56S-B-PN15	EzM-56S-B-PN15	EzS-NDR-56S-B	
Ezi-SERVO-PR-56S-A-PN25	EzM-56S-A-PN25	EzS-NDR-56S-A	1:25
Ezi-SERVO-PR-56S-B-PN25	EzM-56S-B-PN25	EzS-NDR-56S-B	
Ezi-SERVO-PR-56S-A-PN40	EzM-56S-A-PN40	EzS-NDR-56S-A	1:40
Ezi-SERVO-PR-56S-B-PN40	EzM-56S-B-PN40	EzS-NDR-56S-B	
Ezi-SERVO-PR-56S-A-PN50	EzM-56S-A-PN50	EzS-NDR-56S-A	1:50
Ezi-SERVO-PR-56S-B-PN50	EzM-56S-B-PN50	EzS-NDR-56S-B	
Ezi-SERVO-PR-56M-A-PN3	EzM-56M-A-PN3	EzS-NDR-56M-A	1:3
Ezi-SERVO-PR-56M-B-PN3	EzM-56M-B-PN3	EzS-NDR-56M-B	
Ezi-SERVO-PR-56M-A-PN5	EzM-56M-A-PN5	EzS-NDR-56M-A	1:5
Ezi-SERVO-PR-56M-B-PN5	EzM-56M-B-PN5	EzS-NDR-56M-B	
Ezi-SERVO-PR-56M-A-PN8	EzM-56M-A-PN8	EzS-NDR-56M-A	1:8
Ezi-SERVO-PR-56M-B-PN8	EzM-56M-B-PN8	EzS-NDR-56M-B	
Ezi-SERVO-PR-56M-A-PN10	EzM-56M-A-PN10	EzS-NDR-56M-A	1:10
Ezi-SERVO-PR-56M-B-PN10	EzM-56M-B-PN10	EzS-NDR-56M-B	
Ezi-SERVO-PR-56M-A-PN15	EzM-56M-A-PN15	EzS-NDR-56M-A	1:15
Ezi-SERVO-PR-56M-B-PN15	EzM-56M-B-PN15	EzS-NDR-56M-B	
Ezi-SERVO-PR-56M-A-PN25	EzM-56M-A-PN25	EzS-NDR-56M-A	1:25
Ezi-SERVO-PR-56M-B-PN25	EzM-56M-B-PN25	EzS-NDR-56M-B	
Ezi-SERVO-PR-56M-A-PN40	EzM-56M-A-PN40	EzS-NDR-56M-A	1:40
Ezi-SERVO-PR-56M-B-PN40	EzM-56M-B-PN40	EzS-NDR-56M-B	
Ezi-SERVO-PR-56M-A-PN50	EzM-56M-A-PN50	EzS-NDR-56M-A	1:50
Ezi-SERVO-PR-56M-B-PN50	EzM-56M-B-PN50	EzS-NDR-56M-B	

● Combination with Gearbox

Unit Part Number	Motor Model Number	Drive Model Number	Reduction gear ratio
Ezi-SERVO-PR-56L-A-PN3	EzM-56L-A-PN3	EzS-NDR-56L-A	1:3
Ezi-SERVO-PR-56L-B-PN3	EzM-56L-B-PN3	EzS-NDR-56L-B	
Ezi-SERVO-PR-56L-A-PN5	EzM-56L-A-PN5	EzS-NDR-56L-A	1:5
Ezi-SERVO-PR-56L-B-PN5	EzM-56L-B-PN5	EzS-NDR-56L-B	
Ezi-SERVO-PR-56L-A-PN8	EzM-56L-A-PN8	EzS-NDR-56L-A	1:8
Ezi-SERVO-PR-56L-B-PN8	EzM-56L-B-PN8	EzS-NDR-56L-B	
Ezi-SERVO-PR-56L-A-PN10	EzM-56L-A-PN10	EzS-NDR-56L-A	1:10
Ezi-SERVO-PR-56L-B-PN10	EzM-56L-B-PN10	EzS-NDR-56L-B	
Ezi-SERVO-PR-56L-A-PN15	EzM-56L-A-PN15	EzS-NDR-56L-A	1:15
Ezi-SERVO-PR-56L-B-PN15	EzM-56L-B-PN15	EzS-NDR-56L-B	
Ezi-SERVO-PR-56L-A-PN25	EzM-56L-A-PN25	EzS-NDR-56L-A	1:25
Ezi-SERVO-PR-56L-B-PN25	EzM-56L-B-PN25	EzS-NDR-56L-B	
Ezi-SERVO-PR-56L-A-PN40	EzM-56L-A-PN40	EzS-NDR-56L-A	1:40
Ezi-SERVO-PR-56L-B-PN40	EzM-56L-B-PN40	EzS-NDR-56L-B	
Ezi-SERVO-PR-56L-A-PN50	EzM-56L-A-PN50	EzS-NDR-56L-A	1:50
Ezi-SERVO-PR-56L-B-PN50	EzM-56L-B-PN50	EzS-NDR-56L-B	
Ezi-SERVO-PR-60S-A-PN3	EzM-60S-A-PN3	EzS-NDR-60S-A	1:3
Ezi-SERVO-PR-60S-B-PN3	EzM-60S-B-PN3	EzS-NDR-60S-B	
Ezi-SERVO-PR-60S-A-PN5	EzM-60S-A-PN5	EzS-NDR-60S-A	1:5
Ezi-SERVO-PR-60S-B-PN5	EzM-60S-B-PN5	EzS-NDR-60S-B	
Ezi-SERVO-PR-60S-A-PN8	EzM-60S-A-PN8	EzS-NDR-60S-A	1:8
Ezi-SERVO-PR-60S-B-PN8	EzM-60S-B-PN8	EzS-NDR-60S-B	
Ezi-SERVO-PR-60S-A-PN10	EzM-60S-A-PN10	EzS-NDR-60S-A	1:10
Ezi-SERVO-PR-60S-B-PN10	EzM-60S-B-PN10	EzS-NDR-60S-B	
Ezi-SERVO-PR-60S-A-PN15	EzM-60S-A-PN15	EzS-NDR-60S-A	1:15
Ezi-SERVO-PR-60S-B-PN15	EzM-60S-B-PN15	EzS-NDR-60S-B	
Ezi-SERVO-PR-60S-A-PN25	EzM-60S-A-PN25	EzS-NDR-60S-A	1:25
Ezi-SERVO-PR-60S-B-PN25	EzM-60S-B-PN25	EzS-NDR-60S-B	
Ezi-SERVO-PR-60S-A-PN40	EzM-60S-A-PN40	EzS-NDR-60S-A	1:40
Ezi-SERVO-PR-60S-B-PN40	EzM-60S-B-PN40	EzS-NDR-60S-B	
Ezi-SERVO-PR-60S-A-PN50	EzM-60S-A-PN50	EzS-NDR-60S-A	1:50
Ezi-SERVO-PR-60S-B-PN50	EzM-60S-B-PN50	EzS-NDR-60S-B	
Ezi-SERVO-PR-60M-A-PN3	EzM-60M-A-PN3	EzS-NDR-60M-A	1:3
Ezi-SERVO-PR-60M-B-PN3	EzM-60M-B-PN3	EzS-NDR-60M-B	
Ezi-SERVO-PR-60M-A-PN5	EzM-60M-A-PN5	EzS-NDR-60M-A	1:5
Ezi-SERVO-PR-60M-B-PN5	EzM-60M-B-PN5	EzS-NDR-60M-B	
Ezi-SERVO-PR-60M-A-PN8	EzM-60M-A-PN8	EzS-NDR-60M-A	1:8
Ezi-SERVO-PR-60M-B-PN8	EzM-60M-B-PN8	EzS-NDR-60M-B	
Ezi-SERVO-PR-60M-A-PN10	EzM-60M-A-PN10	EzS-NDR-60M-A	1:10
Ezi-SERVO-PR-60M-B-PN10	EzM-60M-B-PN10	EzS-NDR-60M-B	
Ezi-SERVO-PR-60M-A-PN15	EzM-60M-A-PN15	EzS-NDR-60M-A	1:15
Ezi-SERVO-PR-60M-B-PN15	EzM-60M-B-PN15	EzS-NDR-60M-B	
Ezi-SERVO-PR-60M-A-PN25	EzM-60M-A-PN25	EzS-NDR-60M-A	1:25
Ezi-SERVO-PR-60M-B-PN25	EzM-60M-B-PN25	EzS-NDR-60M-B	
Ezi-SERVO-PR-60M-A-PN40	EzM-60M-A-PN40	EzS-NDR-60M-A	1:40
Ezi-SERVO-PR-60M-B-PN40	EzM-60M-B-PN40	EzS-NDR-60M-B	
Ezi-SERVO-PR-60M-A-PN50	EzM-60M-A-PN50	EzS-NDR-60M-A	1:50
Ezi-SERVO-PR-60M-B-PN50	EzM-60M-B-PN50	EzS-NDR-60M-B	
Ezi-SERVO-PR-60L-A-PN3	EzM-60L-A-PN3	EzS-NDR-60L-A	1:3
Ezi-SERVO-PR-60L-B-PN3	EzM-60L-B-PN3	EzS-NDR-60L-B	
Ezi-SERVO-PR-60L-A-PN5	EzM-60L-A-PN5	EzS-NDR-60L-A	1:5
Ezi-SERVO-PR-60L-B-PN5	EzM-60L-B-PN5	EzS-NDR-60L-B	
Ezi-SERVO-PR-60L-A-PN8	EzM-60L-A-PN8	EzS-NDR-60L-A	1:8
Ezi-SERVO-PR-60L-B-PN8	EzM-60L-B-PN8	EzS-NDR-60L-B	
Ezi-SERVO-PR-60L-A-PN10	EzM-60L-A-PN10	EzS-NDR-60L-A	1:10
Ezi-SERVO-PR-60L-B-PN10	EzM-60L-B-PN10	EzS-NDR-60L-B	
Ezi-SERVO-PR-60L-A-PN15	EzM-60L-A-PN15	EzS-NDR-60L-A	1:15
Ezi-SERVO-PR-60L-B-PN15	EzM-60L-B-PN15	EzS-NDR-60L-B	
Ezi-SERVO-PR-60L-A-PN25	EzM-60L-A-PN25	EzS-NDR-60L-A	1:25
Ezi-SERVO-PR-60L-B-PN25	EzM-60L-B-PN25	EzS-NDR-60L-B	
Ezi-SERVO-PR-60L-A-PN40	EzM-60L-A-PN40	EzS-NDR-60L-A	1:40
Ezi-SERVO-PR-60L-B-PN40	EzM-60L-B-PN40	EzS-NDR-60L-B	
Ezi-SERVO-PR-60L-A-PN50	EzM-60L-A-PN50	EzS-NDR-60L-A	1:50
Ezi-SERVO-PR-60L-B-PN50	EzM-60L-B-PN50	EzS-NDR-60L-B	

Unit Part Number	Motor Model Number	Drive Model Number	Reduction gear ratio
Ezi-SERVO-PR-86M-A-PN3	EzM-86M-A-PN3	EzS-NDR-86M-A	1:3
Ezi-SERVO-PR-86M-B-PN3	EzM-86M-B-PN3	EzS-NDR-86M-B	
Ezi-SERVO-PR-86M-A-PN5	EzM-86M-A-PN5	EzS-NDR-86M-A	1:5
Ezi-SERVO-PR-86M-B-PN5	EzM-86M-B-PN5	EzS-NDR-86M-B	
Ezi-SERVO-PR-86M-A-PN8	EzM-86M-A-PN8	EzS-NDR-86M-A	1:8
Ezi-SERVO-PR-86M-B-PN8	EzM-86M-B-PN8	EzS-NDR-86M-B	
Ezi-SERVO-PR-86M-A-PN10	EzM-86M-A-PN10	EzS-NDR-86M-A	1:10
Ezi-SERVO-PR-86M-B-PN10	EzM-86M-B-PN10	EzS-NDR-86M-B	
Ezi-SERVO-PR-86M-A-PN15	EzM-86M-A-PN15	EzS-NDR-86M-A	1:15
Ezi-SERVO-PR-86M-B-PN15	EzM-86M-B-PN15	EzS-NDR-86M-B	
Ezi-SERVO-PR-86M-A-PN25	EzM-86M-A-PN25	EzS-NDR-86M-A	1:25
Ezi-SERVO-PR-86M-B-PN25	EzM-86M-B-PN25	EzS-NDR-86M-B	
Ezi-SERVO-PR-86M-A-PN40	EzM-86M-A-PN40	EzS-NDR-86M-A	1:40
Ezi-SERVO-PR-86M-B-PN40	EzM-86M-B-PN40	EzS-NDR-86M-B	
Ezi-SERVO-PR-86M-A-PN50	EzM-86M-A-PN50	EzS-NDR-86M-A	1:50
Ezi-SERVO-PR-86M-B-PN50	EzM-86M-B-PN50	EzS-NDR-86M-B	
Ezi-SERVO-PR-86L-A-PN3	EzM-86L-A-PN3	EzS-NDR-86L-A	1:3
Ezi-SERVO-PR-86L-B-PN3	EzM-86L-B-PN3	EzS-NDR-86L-B	
Ezi-SERVO-PR-86L-A-PN5	EzM-86L-A-PN5	EzS-NDR-86L-A	1:5
Ezi-SERVO-PR-86L-B-PN5	EzM-86L-B-PN5	EzS-NDR-86L-B	
Ezi-SERVO-PR-86L-A-PN8	EzM-86L-A-PN8	EzS-NDR-86L-A	1:8
Ezi-SERVO-PR-86L-B-PN8	EzM-86L-B-PN8	EzS-NDR-86L-B	
Ezi-SERVO-PR-86L-A-PN10	EzM-86L-A-PN10	EzS-NDR-86L-A	1:10
Ezi-SERVO-PR-86L-B-PN10	EzM-86L-B-PN10	EzS-NDR-86L-B	
Ezi-SERVO-PR-86L-A-PN15	EzM-86L-A-PN15	EzS-NDR-86L-A	1:15
Ezi-SERVO-PR-86L-B-PN15	EzM-86L-B-PN15	EzS-NDR-86L-B	
Ezi-SERVO-PR-86L-A-PN25	EzM-86L-A-PN25	EzS-NDR-86L-A	1:25
Ezi-SERVO-PR-86L-B-PN25	EzM-86L-B-PN25	EzS-NDR-86L-B	
Ezi-SERVO-PR-86L-A-PN40	EzM-86L-A-PN40	EzS-NDR-86L-A	1:40
Ezi-SERVO-PR-86L-B-PN40	EzM-86L-B-PN40	EzS-NDR-86L-B	
Ezi-SERVO-PR-86L-A-PN50	EzM-86L-A-PN50	EzS-NDR-86L-A	1:50
Ezi-SERVO-PR-86L-B-PN50	EzM-86L-B-PN50	EzS-NDR-86L-B	
Ezi-SERVO-PR-86XL-A-PN3	EzM-86XL-A-PN3	EzS-NDR-86XL-A	1:3
Ezi-SERVO-PR-86XL-B-PN3	EzM-86XL-B-PN3	EzS-NDR-86XL-B	
Ezi-SERVO-PR-86XL-A-PN5	EzM-86XL-A-PN5	EzS-NDR-86XL-A	1:5
Ezi-SERVO-PR-86XL-B-PN5	EzM-86XL-B-PN5	EzS-NDR-86XL-B	
Ezi-SERVO-PR-86XL-A-PN8	EzM-86XL-A-PN8	EzS-NDR-86XL-A	1:8
Ezi-SERVO-PR-86XL-B-PN8	EzM-86XL-B-PN8	EzS-NDR-86XL-B	
Ezi-SERVO-PR-86XL-A-PN10	EzM-86XL-A-PN10	EzS-NDR-86XL-A	1:10
Ezi-SERVO-PR-86XL-B-PN10	EzM-86XL-B-PN10	EzS-NDR-86XL-B	
Ezi-SERVO-PR-86XL-A-PN15	EzM-86XL-A-PN15	EzS-NDR-86XL-A	1:15
Ezi-SERVO-PR-86XL-B-PN15	EzM-86XL-B-PN15	EzS-NDR-86XL-B	
Ezi-SERVO-PR-86XL-A-PN25	EzM-86XL-A-PN25	EzS-NDR-86XL-A	1:25
Ezi-SERVO-PR-86XL-B-PN25	EzM-86XL-B-PN25	EzS-NDR-86XL-B	
Ezi-SERVO-PR-86XL-A-PN40	EzM-86XL-A-PN40	EzS-NDR-86XL-A	1:40
Ezi-SERVO-PR-86XL-B-PN40	EzM-86XL-B-PN40	EzS-NDR-86XL-B	
Ezi-SERVO-PR-86XL-A-PN50	EzM-86XL-A-PN50	EzS-NDR-86XL-A	1:50
Ezi-SERVO-PR-86XL-B-PN50	EzM-86XL-B-PN50	EzS-NDR-86XL-B	

● Specifications of Drive

Motor Model		EzM-20 series	EzM-28 series	EzM-35 series	EzM-42 series	EzM-56 series	EzM-60 series	EzM-86 series
Driver Model		EzS-NDR-20 series	EzS-NDR-28 series	EzS-NDR-35 series	EzS-NDR-42 series	EzS-NDR-56 series	EzS-NDR-60 series	EzS-NDR-86 series
Input Voltage		24VDC ±10%						40~70VDC
Control Method		Closed loop control with 32bit DSP						
Multi Axes Drive		Maximum 16 axes through Daisy-Chain						
Position Table		256 motion command steps (Continuous, Wait, Loop, Jump and External start etc.)						
Current Consumption		Max 500mA (Except motor current)						
Operating Condition	Ambient Temperature	· In Use: 0~50℃ · In Storage: -20~70℃						
	Humidity	· In Use: 35~85% RH (Non-Condensing) · In Storage: 10~90% RH (Non-Condensing)						
	Vib. Resist.	0.5g						
Function	Rotation Speed	0~3,000 [rpm] *1						
	Resolution [ppr]	4,000/Rev. Encoder model: 500 1,000 1,600 2,000 3,600 5,000 6,400 7,200 10,000 4,000 10,000/Rev. Encoder model: 500 1,000 1,600 2,000 3,600 5,000 6,400 7,200 10,000 16,000/Rev. Encoder model: 500 1,000 1,600 2,000 3,600 5,000 6,400 7,200 10,000 16,000 20,000/Rev. Encoder model: 500 1,000 1,600 2,000 3,600 5,000 6,400 7,200 10,000 20,000 32,000/Rev. Encoder model: 500 1,000 1,600 2,000 3,600 5,000 6,400 7,200 10,000 32,000 (Selectable by parameter) *2						
	Protection Functions	Over Current Error, Over Speed Error, Position Tracking Error, Over Load Error, Over Temperature Error, Over Regenerated Voltage Error, Motor Connect Error, Encoder Connect Error, In-Position Error, System Error, ROM Error, Position Overflow Error						
	LED Display	Power status, Alarm status, In-Position status, Servo On status						
	In-Position Selection	0~15 (Selectable by parameter)						
	Position Gain Selection	0~15 (Selectable by parameter)						
	Rotational Direction	CW/CCW (Selectable by parameter)						
I/O Signal	Input Signals	3 dedicated inputs (LIMIT+, LIMIT-, ORIGIN), 9 programmable inputs (Photocoupler)						
	Output Signals	1 dedicated output (Compare Out), 9 programmable outputs (Photocoupler), Brake						
Communication Interface		RS-485 serial communication Communication speed: 9,600~921,600 [bps]						
Position Control		· Incremental mode / Absolute mode Data Range: -134,217,728 to +134,217,727 [pulse] · Operating speed: Max. 3,000 [rpm]						
Return to Origin		Origin Sensor, Z phase, ±Limit sensor, Torque						
GUI		User Interface Program within Windows						
Software		Motion Library (DLL) for Windows XP/7/8/10						

*1 : Up to the resolution of 10,000[ppr], maximum speed can be reached by 3,000[rpm] and with the resolution more than 10,000[ppr], maximum speed shall be reduced accordingly.

*2 : When selected resolution is more than encoder resolution, motor shall be operated by microstep between pulses.

● Dimensions of Drive [mm]

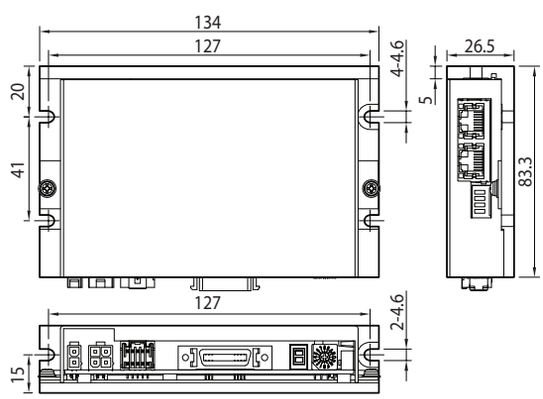

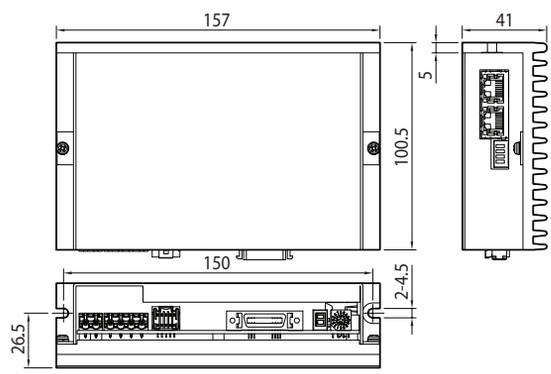

● Specifications of Motor

MODEL			EzM-20 series		EzM-28 series			EzM-35 series		EzM-42 series			
		UNIT	20M	20L	28S	28M	28L	35M	35L	42S	42M	42L	42XL
DRIVE METHOD		–	BI-POLAR										
NUMBER OF PHASES		–	2	2	2	2	2	2	2	2	2	2	2
VOLTAGE		VDC	2.75	3.0	3.0	3.0	3.0	1.8	2.7	3.36	4.32	4.56	7.2
CURRENT per PHASE		A	0.5	0.5	0.95	0.95	0.95	1.5	1.5	1.2	1.2	1.2	1.2
RESISTANCE per PHASE		Ohm	5.5	6.0	3.2	3.2	3.2	1.2	1.8	2.8	3.6	3.8	6.0
INDUCTANCE per PHASE		mH	2.0	2.6	2.0	2.7	3.2	1.2	2.6	5.4	7.2	8.0	15.6
HOLDING TORQUE		N·m	0.016	0.025	0.069	0.098	0.118	0.13	0.23	0.32	0.44	0.5	0.65
ROTOR INERTIA		$g \cdot cm^2$	2.5	3.3	9.0	13	18	15	20	35	54	77	114
WEIGHTS		g	50	80	110	140	200	150	180	250	280	350	500
LENGTH(L)		mm	28	38	32	45	50	32	36	34	40	48	60
PERMISSIBLE OVERHUNG LOAD (DISTANCE FROM END OF SHAFT)	3mm	N	18	18	30	30	30	22	22	22	22	22	22
	8mm		30	30	38	38	38	26	26	26	26	26	26
	13mm		–	–	53	53	53	33	33	33	33	33	33
	18mm		–	–	–	–	–	46	46	46	46	46	46
PERMISSIBLE THRUST LOAD		N	Lower than motor weight										
INSULATION RESISTANCE		Mohm	100 MIN.(at 500VDC)										
INSULATION CLASS		–	CLASS B(130℃)										
OPERATING TEMPERATURE		℃	0 to 55										

MODEL			EzM-56 series			EzM-60 series			EzM-86 series		
		UNIT	56S	56M	56L	60S	60M	60L	86M	86L	86XL
DRIVE METHOD		–	BI-POLAR								
NUMBER OF PHASES		–	2	2	2	2	2	2	2	2	2
VOLTAGE		VDC	1.56	1.62	2.64	1.32	1.48	2.2	2.34	3.6	4.8
CURRENT per PHASE		A	3.0	3.0	3.0	4.0	4.0	4.0	6.0	6.0	6.0
RESISTANCE per PHASE		Ohm	0.52	0.54	0.88	0.33	0.37	0.55	0.39	0.6	0.8
INDUCTANCE per PHASE		mH	1.2	2.0	4.0	0.75	1.1	2.7	3.0	6.5	8.68
HOLDING TORQUE		N·m	0.64	1.0	1.5	0.88	1.28	2.4	4.5	8.5	12
ROTOR INERTIA		$g \cdot cm^2$	180	280	520	240	490	690	1800	3600	5400
WEIGHTS		g	500	720	1150	600	1000	1300	2300	3800	5300
LENGTH(L)		mm	46	55	80	47	56	85	78	117	155
PERMISSIBLE OVERHUNG LOAD (DISTANCE FROM END OF SHAFT)	3mm	N	52	52	52	70	70	70	270	270	270
	8mm		65	65	65	87	87	87	300	300	300
	13mm		85	85	85	114	114	114	350	350	350
	18mm		123	123	123	165	165	165	400	400	400
PERMISSIBLE THRUST LOAD		N	Lower than motor weight								
INSULATION RESISTANCE		Mohm	100 MIN.(at 500VDC)								
INSULATION CLASS		–	CLASS B(130℃)								
OPERATING TEMPERATURE		℃	0 to 55								

● Torque Characteristics of Motor

Ezi-SERVO-PR-20 series

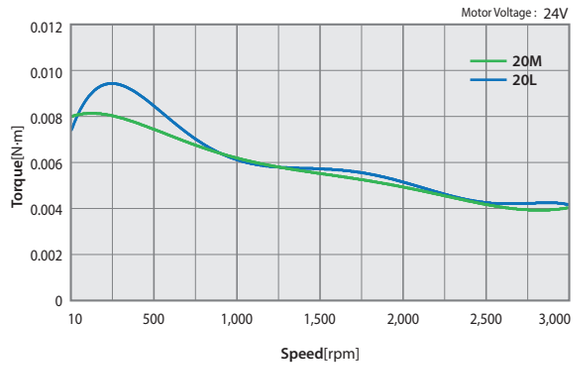

Ezi-SERVO-PR-28 series

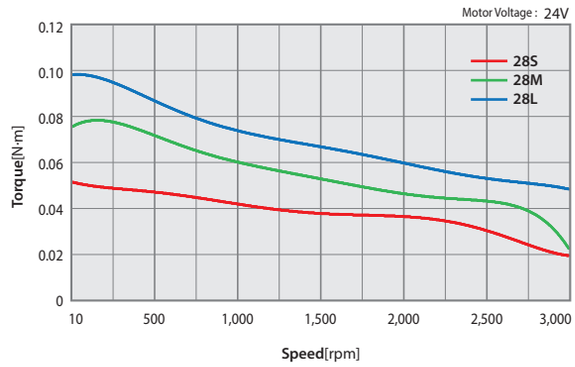

Ezi-SERVO-PR-35 series

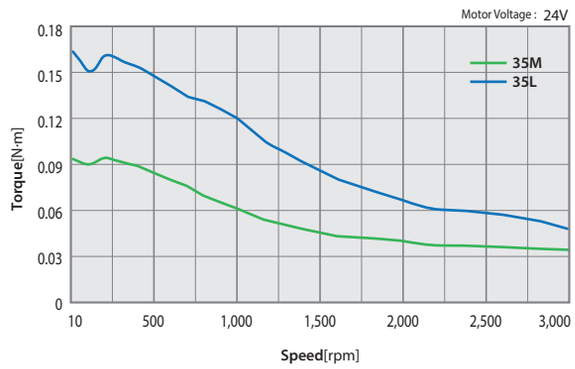

Ezi-SERVO-PR-42 series

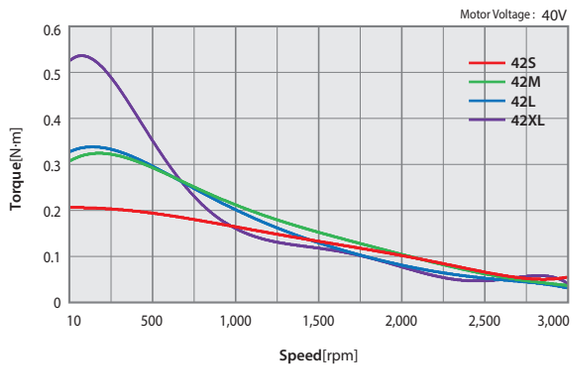

Ezi-SERVO-PR-56 series

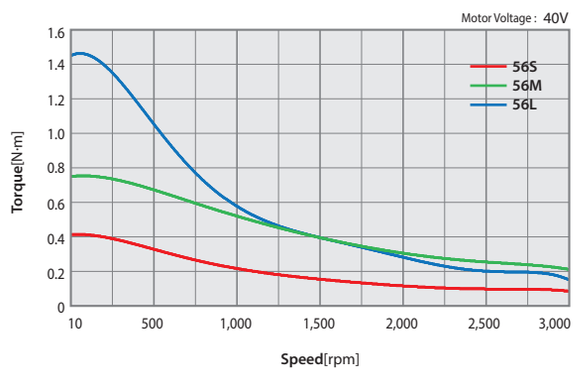

Ezi-SERVO-PR-60 series

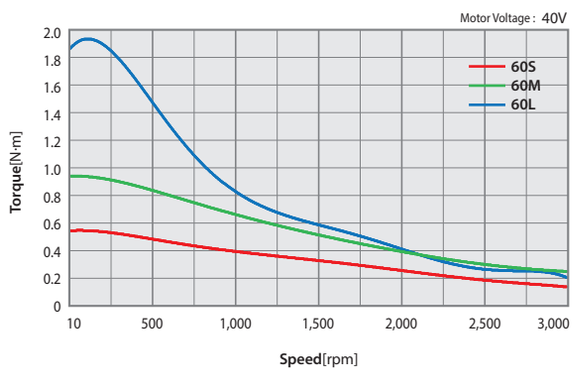

Ezi-SERVO-PR-86 series

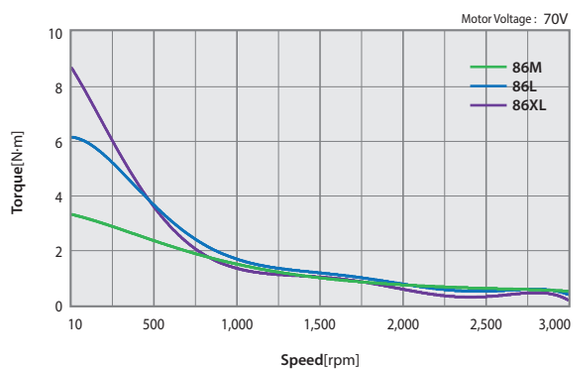

● Dimensions of Motor [mm]

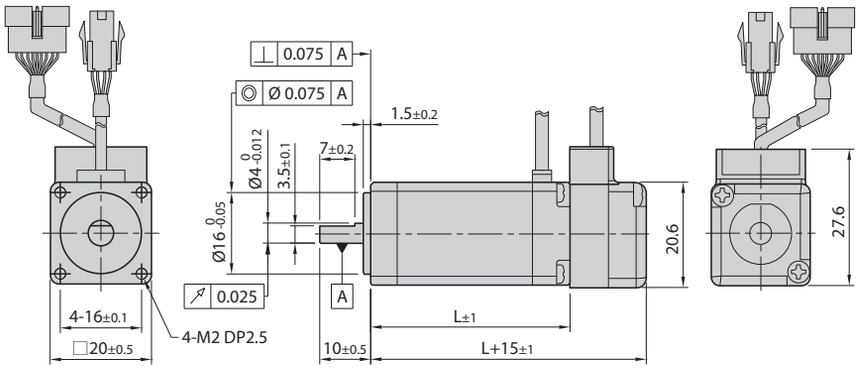

20mm

Model name	Length(L)
EzM-20M	28
EzM-20L	38

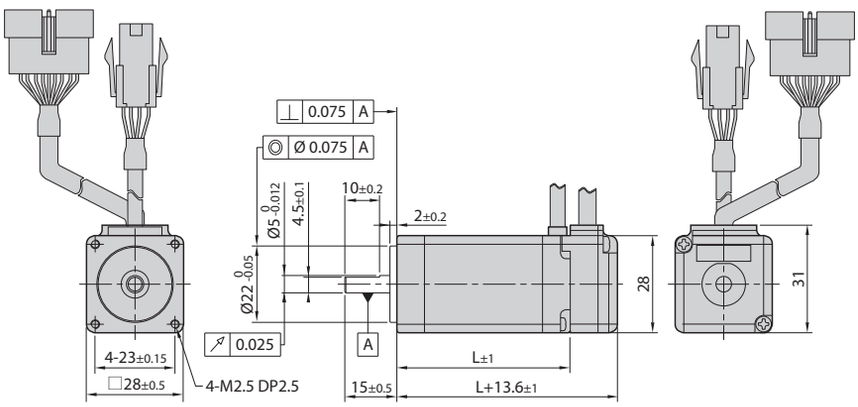

28mm

Model name	Length(L)
EzM-28S	32
EzM-28M	45
EzM-28L	50

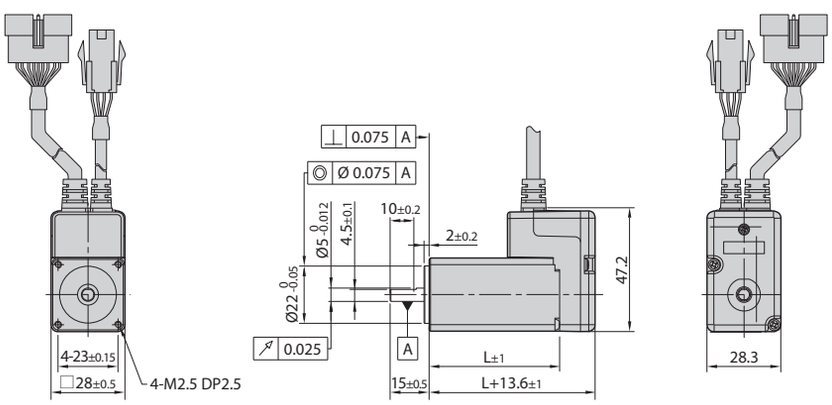

28mm (Stopper type)

Model name	Length(L)
EzM-28SM	32
EzM-28MM	45
EzM-28LM	50

※ When ordering 28mm Stopper type of motor, please add "M" after standard motor model number.

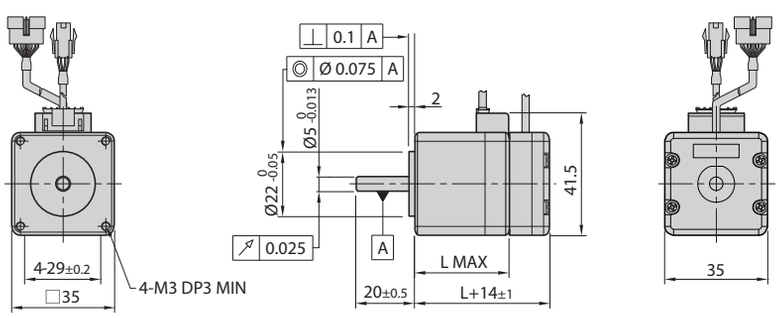

35mm

Model name	Length(L)
EzM-35M	26
EzM-35L	38

● Dimensions of Motor [mm]

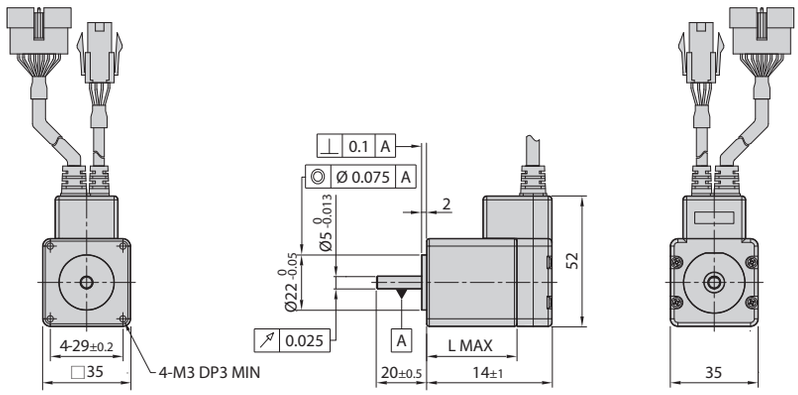

35mm
(Stopper type)

Model name	Length(L)
EzM-35MM	32
EzM-35LM	36

※ When ordering 35mm Stopper type of motor, please add "M" after standard motor model number.

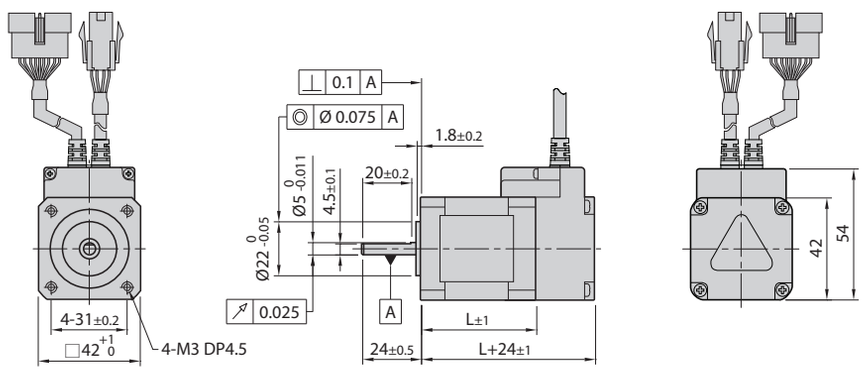

42mm

Model name	Length(L)
EzM-42S	34
EzM-42M	40
EzM-42L	48
EzM-42XL	60

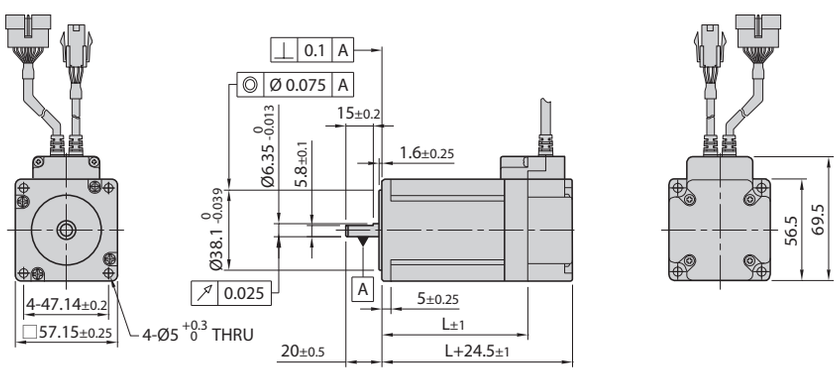

56mm

Model name	Length(L)
EzM-56S	46
EzM-56M	55
EzM-56L	80

※ There are 2 kinds size of front shaft diameter for EzM-56 series as Ø6.35 and Ø8.0.

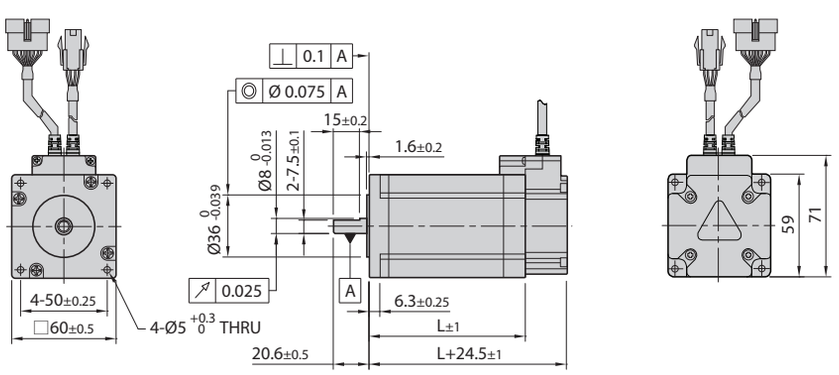

60mm

Model name	Length(L)
EzM-60S	47
EzM-60M	56
EzM-60L	85

● Dimensions of Motor [mm]

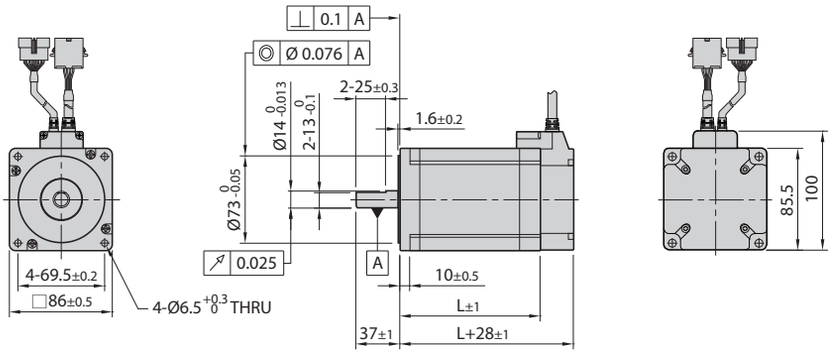

86mm

모터 품명	길이(L)
EzM-86M	78
EzM-86L	117
EzM-86XL	155

● Specifications of Motor with Brake

Unit Part Number	Motor Model Number	Electronic Brake					Motor Unit Weight [g]	Permitted Overhung Load [N]				Permitted Thrust Load [N]
		Type	Voltage Input [V]	Rated Current [A]	Power Consumption [W]	Statical Friction Torque [N·m]		Length from Motor Point [mm]				
								3	8	13	18	
Ezi-SERVO-PR-42S-■-BK	EzM-42S-■-BK	Non-excitation run Type	24VDC ±10%	0.2	5	0.2	510	22	26	33	46	Must be Lower than Unit's Weight
Ezi-SERVO-PR-42M-■-BK	EzM-42M-■-BK						570					
Ezi-SERVO-PR-42L-■-BK	EzM-42L-■-BK						640					
Ezi-SERVO-PR-42XL-■-BK	EzM-42XL-■-BK						770					
Ezi-SERVO-PR-56S-■-BK	EzM-56S-■-BK			0.27	6.6	0.7	1030	52	65	85	123	
Ezi-SERVO-PR-56M-■-BK	EzM-56M-■-BK						1190					
Ezi-SERVO-PR-56L-■-BK	EzM-56L-■-BK						1630					
Ezi-SERVO-PR-60S-■-BK	EzM-60S-■-BK						1150	70	87	114	165	
Ezi-SERVO-PR-60M-■-BK	EzM-60M-■-BK						1350					
Ezi-SERVO-PR-60L-■-BK	EzM-60L-■-BK						1960					
Ezi-SERVO-PR-86M-■-BK	EzM-86M-■-BK			0.54	13	4	3600	270	300	350	400	
Ezi-SERVO-PR-86L-■-BK	EzM-86L-■-BK						5100					
Ezi-SERVO-PR-86XL-■-BK	EzM-86XL-■-BK						6600					

* The code of encoder resolution will be marked in "■"
* Electronic Brake cannot be used for braking. Position hold purpose only when power OFF.
* The weight means Motor Unit Weight including Motor and Electronic Brake.
* Motor Model Number is combined model name of Motor and Brake.
* Motor specification and torque characteristic are same as Standard Motor.

* Brake Operation Timing Chart

Ezi-SERVO Plus-R controls Brake by Drive automatically.
Please refer to below Timing Chart when Brake is controlled by the upper controller other than using Ezi-SERVO Plus-R Brake control. Otherwise, Drive malfunctioning and loads can be fall down.
Also, please do not operate Brake while motor operation to prevent damage.

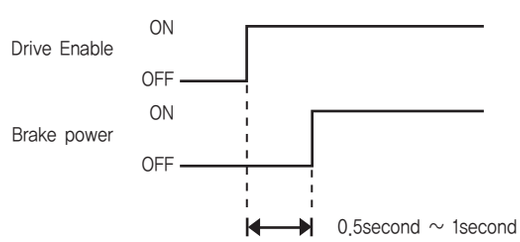

● Dimensions of Motor with Brake [mm]

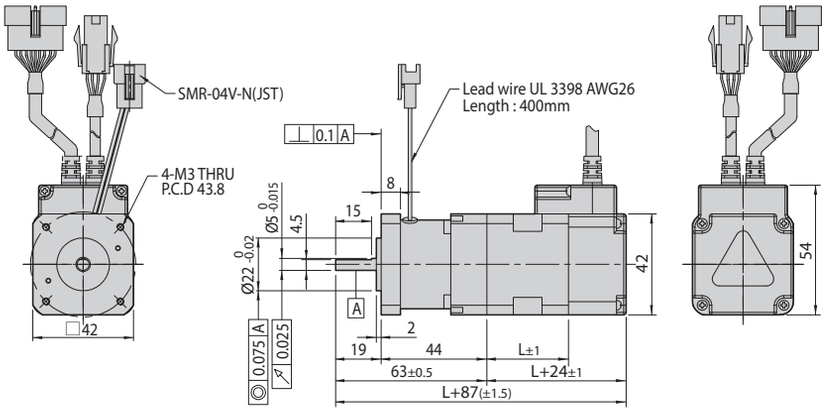

42mm

Model Name	Length(L)	Weight(kg)
EzM-42S	34	0.51
EzM-42M	40	0.57
EzM-42L	48	0.64
EzM-42XL	60	0.77

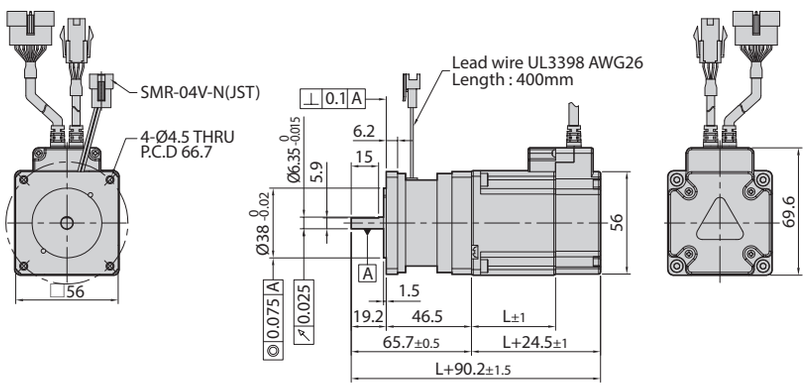

56mm

Model Name	Length(L)	Weight(kg)
EzM-56S	46	1.03
EzM-56M	55	1.19
EzM-56L	80	1.63

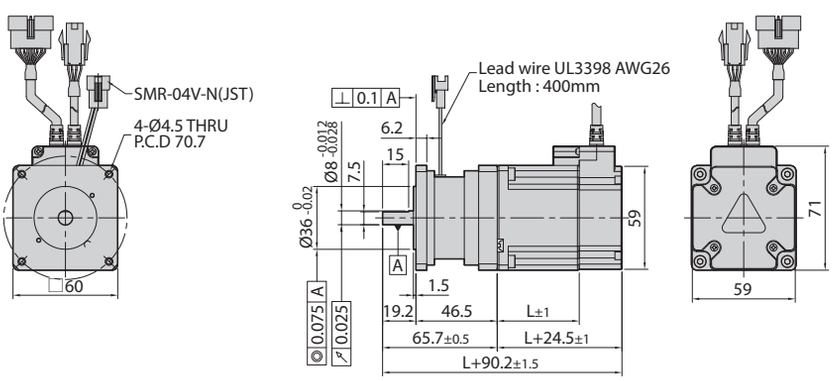

60mm

Model Name	Length(L)	Weight(kg)
EzM-60S	47	1.15
EzM-60M	56	1.35
EzM-60L	85	1.96

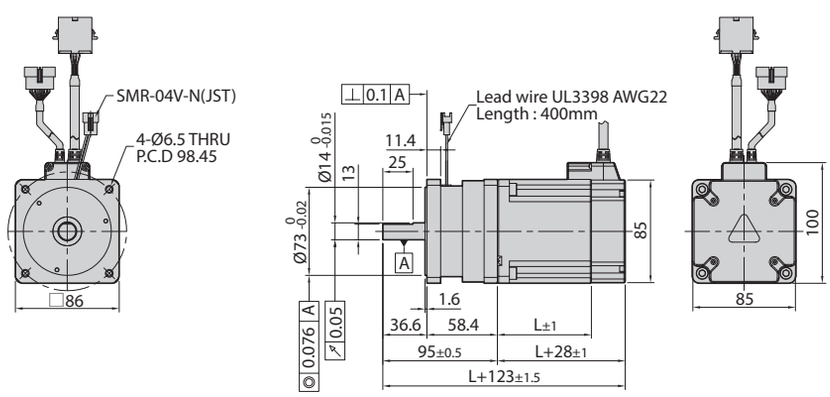

86mm

Model Name	Length(L)	Weight(kg)
EzM-86M	78	3.6
EzM-86L	117	5.1
EzM-86XL	155	6.6

● Specifications of Motor with Gearbox

42mm

Unit Part Number	Maximum Holding Torque [N·m]	Rotor Inertia Moment [kg·m²]	Back-lash [min]	Angle Trans-mission Error [min]	Re-duction Gear Ratio	Resolution (10,000 [ppr] Standard)	Permitted Torque [N·m]	Maximum Torque [N·m]	Permitted Speed Range [rpm]	Unit Weight [kg]	Permitted Overhung Load [N] Axis Center Standard	Permitted Thrust Load [N]
Ezi-SERVO-PR-42S-■-PN3	0.57	$35x10^{-7}$	3	5	3	0.012°	6	12	0~1000	0.89	240	270
Ezi-SERVO-PR-42S-■-PN5	0.95				5	0.0072°	9	18	0~600		290	330
Ezi-SERVO-PR-42S-■-PN8	1.52				8	0.0045°	9	18	0~375		340	410
Ezi-SERVO-PR-42S-■-PN10	1.90				10	0.0036°	6	12	0~300		360	450
Ezi-SERVO-PR-42S-■-PN15	2.76		5	7	15	0.0024°	6	12	0~200	0.99	410	540
Ezi-SERVO-PR-42S-■-PN25	4.60				25	0.00144°	9	18	0~120		490	640
Ezi-SERVO-PR-42S-■-PN40	7.36				40	0.0009°	9	18	0~75		570	640
Ezi-SERVO-PR-42S-■-PN50	9.00				50	0.00072°	9	18	0~60		620	640
Ezi-SERVO-PR-42M-■-PN3	0.85	$54x10^{-7}$	3	5	3	0.012°	6	12	0~1000	0.96	240	270
Ezi-SERVO-PR-42M-■-PN5	1.42				5	0.0072°	9	18	0~600		290	330
Ezi-SERVO-PR-42M-■-PN8	2.28				8	0.0045°	9	18	0~375		340	410
Ezi-SERVO-PR-42M-■-PN10	2.85				10	0.0036°	6	12	0~300		360	450
Ezi-SERVO-PR-42M-■-PN15	4.14		5	7	15	0.0024°	6	12	0~200	1.06	410	540
Ezi-SERVO-PR-42M-■-PN25	6.90				25	0.00144°	9	18	0~120		490	640
Ezi-SERVO-PR-42M-■-PN40	9.00				40	0.0009°	9	18	0~75		570	640
Ezi-SERVO-PR-42M-■-PN50	9.00				50	0.00072°	9	18	0~60		620	640
Ezi-SERVO-PR-42L-■-PN3	0.92	$77x10^{-7}$	3	5	3	0.012°	6	12	0~1000	1.02	240	270
Ezi-SERVO-PR-42L-■-PN5	1.54				5	0.0072°	9	18	0~600		290	330
Ezi-SERVO-PR-42L-■-PN8	2.47				8	0.0045°	9	18	0~375		340	410
Ezi-SERVO-PR-42L-■-PN10	3.09				10	0.0036°	6	12	0~300		360	450
Ezi-SERVO-PR-42L-■-PN15	4.49		5	7	15	0.0024°	6	12	0~200	1.12	410	540
Ezi-SERVO-PR-42L-■-PN25	7.49				25	0.00144°	9	18	0~120		490	640
Ezi-SERVO-PR-42L-■-PN40	9.00				40	0.0009°	9	18	0~75		570	640
Ezi-SERVO-PR-42L-■-PN50	9.00				50	0.00072°	9	18	0~60		620	640
Ezi-SERVO-PR-42XL-■-PN3	1.45	$114x10^{-7}$	3	5	3	0.012°	6	12	0~1000	1.15	240	270
Ezi-SERVO-PR-42XL-■-PN5	2.42				5	0.0072°	9	18	0~600		290	330
Ezi-SERVO-PR-42XL-■-PN8	3.87				8	0.0045°	9	18	0~375		340	410
Ezi-SERVO-PR-42XL-■-PN10	4.84				10	0.0036°	6	12	0~300		360	450
Ezi-SERVO-PR-42XL-■-PN15	6.00		5	7	15	0.0024°	6	12	0~200	1.25	410	540
Ezi-SERVO-PR-42XL-■-PN25	9.00				25	0.00144°	9	18	0~120		490	640
Ezi-SERVO-PR-42XL-■-PN40	9.00				40	0.0009°	9	18	0~75		570	640
Ezi-SERVO-PR-42XL-■-PN50	9.00				50	0.00072°	9	18	0~60		620	640

* The code of encoder resolution will be marked in "■"

● Specifications of Motor with Gearbox

56mm

Unit Part Number	Maximum Holding Torque [N·m]	Rotor Inertia Moment [kg·m²]	Back-lash [min]	Angle Trans-mission Error [min]	Re-duction Gear Ratio	Resolution (10,000 [ppr] Standard)	Permitted Torque [N·m]	Maximum Torque [N·m]	Permitted Speed Range [rpm]	Unit Weight [kg]	Permitted Overhung Load [N] Axis Center Standard	Permitted Thrust Load [N]
Ezi-SERVO-PR-56S-■-PN3	1.1	$180x10^{-7}$	3	5	3	0.012°	18	35	0~1000	1.94	430	310
Ezi-SERVO-PR-56S-■-PN5	1.9				5	0.0072°	27	50	0~600		510	390
Ezi-SERVO-PR-56S-■-PN8	3.0				8	0.0045°	27	50	0~375		600	480
Ezi-SERVO-PR-56S-■-PN10	3.8				10	0.0036°	18	35	0~300		640	530
Ezi-SERVO-PR-56S-■-PN15	5.5				15	0.0024°	18	35	0~200	2.14	740	630
Ezi-SERVO-PR-56S-■-PN25	9.3				25	0.00144°	27	50	0~120		870	790
Ezi-SERVO-PR-56S-■-PN40	14.9				40	0.0009°	27	50	0~75		1000	970
Ezi-SERVO-PR-56S-■-PN50	18.6				50	0.00072°	27	50	0~60		1100	1100
Ezi-SERVO-PR-56M-■-PN3	2.0	$280x10^{-7}$	3	5	3	0.012°	18	35	0~1000	2.15	430	310
Ezi-SERVO-PR-56M-■-PN5	3.4				5	0.0072°	27	50	0~600		510	390
Ezi-SERVO-PR-56M-■-PN8	5.4				8	0.0045°	27	50	0~375		600	480
Ezi-SERVO-PR-56M-■-PN10	6.8				10	0.0036°	18	35	0~300		640	530
Ezi-SERVO-PR-56M-■-PN15	9.9				15	0.0024°	18	35	0~200	2.35	740	630
Ezi-SERVO-PR-56M-■-PN25	16.6				25	0.00144°	27	50	0~120		870	790
Ezi-SERVO-PR-56M-■-PN40	27.0				40	0.0009°	27	50	0~75		1000	970
Ezi-SERVO-PR-56M-■-PN50	27.0				50	0.00072°	27	50	0~60		1100	1100
Ezi-SERVO-PR-56L-■-PN3	4.0	$520x10^{-7}$	3	5	3	0.012°	18	35	0~1000	2.52	430	310
Ezi-SERVO-PR-56L-■-PN5	6.8				5	0.0072°	27	50	0~600		510	390
Ezi-SERVO-PR-56L-■-PN8	10.8				8	0.0045°	27	50	0~375		600	480
Ezi-SERVO-PR-56L-■-PN10	13.6				10	0.0036°	18	35	0~300		640	530
Ezi-SERVO-PR-56L-■-PN15	18.0				15	0.0024°	18	35	0~200	2.72	740	630
Ezi-SERVO-PR-56L-■-PN25	27.0				25	0.00144°	27	50	0~120		870	790
Ezi-SERVO-PR-56L-■-PN40	27.0				40	0.0009°	27	50	0~75		1000	970
Ezi-SERVO-PR-56L-■-PN50	27.0				50	0.00072°	27	50	0~60		1100	1100

* The code of encoder resolution will be marked in "■"

● Specifications of Motor with Gearbox

60mm

Unit Part Number	Maximum Holding Torque [N·m]	Rotor Inertia Moment [kg·m²]	Back-lash [min]	Angle Trans-mission Error [min]	Re-duction Gear Ratio	Resolution (10,000 [ppr] Standard)	Permitted Torque [N·m]	Maximum Torque [N·m]	Permitted Speed Range [rpm]	Unit Weight [kg]	Permitted Overhung Load [N] Axis Center Standard	Permitted Thrust Load [N]
Ezi-SERVO-PR-60S-■-PN3	1.5	$240x10^{-7}$	3	5	3	0.012°	18	35	0~1000	2.0	430	310
Ezi-SERVO-PR-60S-■-PN5	2.5				5	0.0072°	27	50	0~600		510	390
Ezi-SERVO-PR-60S-■-PN8	4.0				8	0.0045°	27	50	0~375		600	480
Ezi-SERVO-PR-60S-■-PN10	5.1				10	0.0036°	18	35	0~300		640	530
Ezi-SERVO-PR-60S-■-PN15	7.4				15	0.0024°	18	35	0~200	2.2	740	630
Ezi-SERVO-PR-60S-■-PN25	12.3				25	0.00144°	27	50	0~120		870	790
Ezi-SERVO-PR-60S-■-PN40	19.8				40	0.0009°	27	50	0~75		1000	970
Ezi-SERVO-PR-60S-■-PN50	24.7				50	0.00072°	27	50	0~60		1100	1100
Ezi-SERVO-PR-60M-■-PN3	2.6	$490x10^{-7}$	3	5	3	0.012°	18	35	0~1000	2.0	430	310
Ezi-SERVO-PR-60M-■-PN5	4.4				5	0.0072°	27	50	0~600		510	390
Ezi-SERVO-PR-60M-■-PN8	7.0				8	0.0045°	27	50	0~375		600	480
Ezi-SERVO-PR-60M-■-PN10	8.8				10	0.0036°	18	35	0~300		640	530
Ezi-SERVO-PR-60M-■-PN15	12.8				15	0.0024°	18	35	0~200	2.2	740	630
Ezi-SERVO-PR-60M-■-PN25	21.4				25	0.00144°	27	50	0~120		870	790
Ezi-SERVO-PR-60M-■-PN40	27.0				40	0.0009°	27	50	0~75		1000	970
Ezi-SERVO-PR-60M-■-PN50	27.0				50	0.00072°	27	50	0~60		1100	1100
Ezi-SERVO-PR-60L-■-PN3	5.2	$690x10^{-7}$	3	5	3	0.012°	18	35	0~1000	3.0	430	310
Ezi-SERVO-PR-60L-■-PN5	8.7				5	0.0072°	27	50	0~600		510	390
Ezi-SERVO-PR-60L-■-PN8	13.9				8	0.0045°	27	50	0~375		600	480
Ezi-SERVO-PR-60L-■-PN10	18.0				10	0.0036°	18	35	0~300		640	530
Ezi-SERVO-PR-60L-■-PN15	18.0				15	0.0024°	18	35	0~200	3.2	740	630
Ezi-SERVO-PR-60L-■-PN25	27.0				25	0.00144°	27	50	0~120		870	790
Ezi-SERVO-PR-60L-■-PN40	27.0				40	0.0009°	27	50	0~75		1000	970
Ezi-SERVO-PR-60L-■-PN50	27.0				50	0.00072°	27	50	0~60		1100	1100

* The code of encoder resolution will be marked in "■"

● Specifications of Motor with Gearbox

86mm

Unit Part Number	Maximum Holding Torque [N·m]	Rotor Inertia Moment [kg·m²]	Back-lash [min]	Angle Trans-mission Error [min]	Re-duction Gear Ratio	Resolution (10,000 [ppr] Standard)	Permitted Torque [N·m]	Maximum Torque [N·m]	Permitted Speed Range [rpm]	Unit Weight [kg]	Permitted Overhung Load [N] Axis Center Standard	Permitted Thrust Load [N]
Ezi-SERVO-PR-86M-■-PN3	9.6	$1800x10^{-7}$	3	5	3	0.012°	50	80	0~1000	6.0	810	930
Ezi-SERVO-PR-86M-■-PN5	16.0				5	0.0072°	75	125	0~600		960	1200
Ezi-SERVO-PR-86M-■-PN8	25.7				8	0.0045°	75	125	0~375		1100	1400
Ezi-SERVO-PR-86M-■-PN10	32.1				10	0.0036°	50	80	0~300		1200	1600
Ezi-SERVO-PR-86M-■-PN15	46.6				15	0.0024°	50	80	0~200	6.5	1200	1900
Ezi-SERVO-PR-86M-■-PN25	75.0				25	0.00144°	75	125	0~120		1600	2200
Ezi-SERVO-PR-86M-■-PN40	75.0				40	0.0009°	75	125	0~75		1900	2200
Ezi-SERVO-PR-86M-■-PN50	75.0				50	0.00072°	75	125	0~60		2100	2200
Ezi-SERVO-PR-86L-■-PN3	17.1	$3600x10^{-7}$	3	5	3	0.012°	50	80	0~1000	7.5	810	930
Ezi-SERVO-PR-86L-■-PN5	28.5				5	0.0072°	75	125	0~600		960	1200
Ezi-SERVO-PR-86L-■-PN8	45.6				8	0.0045°	75	125	0~375		1100	1400
Ezi-SERVO-PR-86L-■-PN10	50.0				10	0.0036°	50	80	0~300		1200	1600
Ezi-SERVO-PR-86L-■-PN15	50.0				15	0.0024°	50	80	0~200	8.0	1200	1900
Ezi-SERVO-PR-86L-■-PN25	75.0				25	0.00144°	75	125	0~120		1600	2200
Ezi-SERVO-PR-86L-■-PN40	75.0				40	0.0009°	75	125	0~75		1900	2200
Ezi-SERVO-PR-86L-■-PN50	75.0				50	0.00072°	75	125	0~60		2100	2200
Ezi-SERVO-PR-86XL-■-PN3	23.6	$5400x10^{-7}$	3	5	3	0.012°	50	80	0~1000	9.0	810	930
Ezi-SERVO-PR-86XL-■-PN5	39.4				5	0.0072°	75	125	0~600		960	1200
Ezi-SERVO-PR-86XL-■-PN8	63.0				8	0.0045°	75	125	0~375		1100	1400
Ezi-SERVO-PR-86XL-■-PN10	50.0				10	0.0036°	50	80	0~300		1200	1600
Ezi-SERVO-PR-86XL-■-PN15	50.0				15	0.0024°	50	80	0~200	9.5	1200	1900
Ezi-SERVO-PR-86XL-■-PN25	75.0				25	0.00144°	75	125	0~120		1600	2200
Ezi-SERVO-PR-86XL-■-PN40	75.0				40	0.0009°	75	125	0~75		1900	2200
Ezi-SERVO-PR-86XL-■-PN50	75.0				50	0.00072°	75	125	0~60		2100	2200

* The code of encoder resolution will be marked in "■"

● Dimensions of Motor with Gearbox [mm]

42mm

Unit Part Number	Motor	Stage	□Reduction Gear Ratio	L Length [mm]
Ezi-SERVO-PR-42S-■-PN□	EzM-42S-■-PN□	Single Stage	3, 5, 8, 10	34
Ezi-SERVO-PR-42M-■-PN□	EzM-42M-■-PN□		3, 5, 8, 10	40
Ezi-SERVO-PR-42L-■-PN□	EzM-42L-■-PN□		3, 5, 8, 10	48
Ezi-SERVO-PR-42XL-■-PN□	EzM-42XL-■-PN□		3, 5, 8, 10	60

* The code of encoder resolution will be marked in "■"

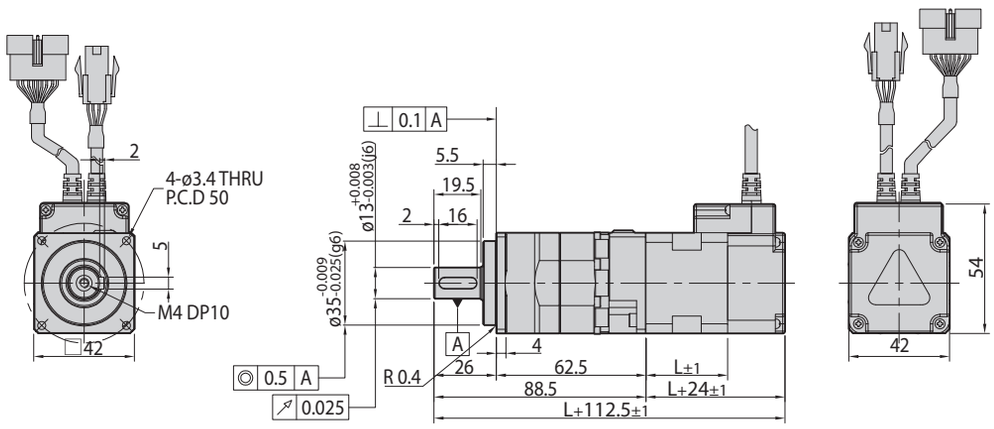

Unit Part Number	Motor	Stage	□Reduction Gear Ratio	L Length [mm]
Ezi-SERVO-PR-42S-■-PN□	EzM-42S-■-PN□	Double Stage	15, 25, 40, 50	34
Ezi-SERVO-PR-42M-■-PN□	EzM-42M-■-PN□		15, 25, 40, 50	40
Ezi-SERVO-PR-42L-■-PN□	EzM-42L-■-PN□		15, 25, 40, 50	48
Ezi-SERVO-PR-42XL-■-PN□	EzM-42XL-■-PN□		15, 25, 40, 50	60

* The code of encoder resolution will be marked in "■"

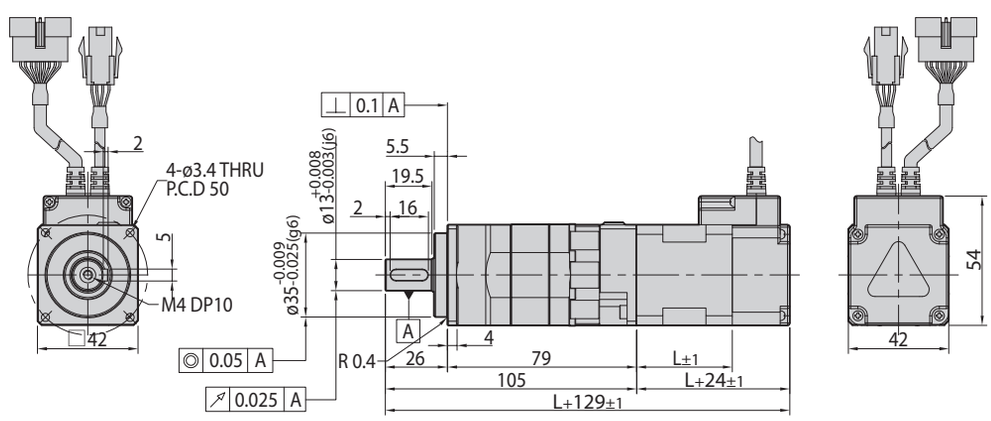

● Dimensions of Motor with Gearbox [mm]

56mm

Unit Part Number	Motor	Stage	□Reduction Gear Ratio	L Length [mm]
Ezi-SERVO-PR-56S-■-PN□	EzM-56S-■-PN□	Single Stage	3, 5, 8, 10	46
Ezi-SERVO-PR-56M-■-PN□	EzM-56M-■-PN□		3, 5, 8, 10	55
Ezi-SERVO-PR-56L-■-PN□	EzM-56L-■-PN□		3, 5, 8, 10	80

* The code of encoder resolution will be marked in "■"

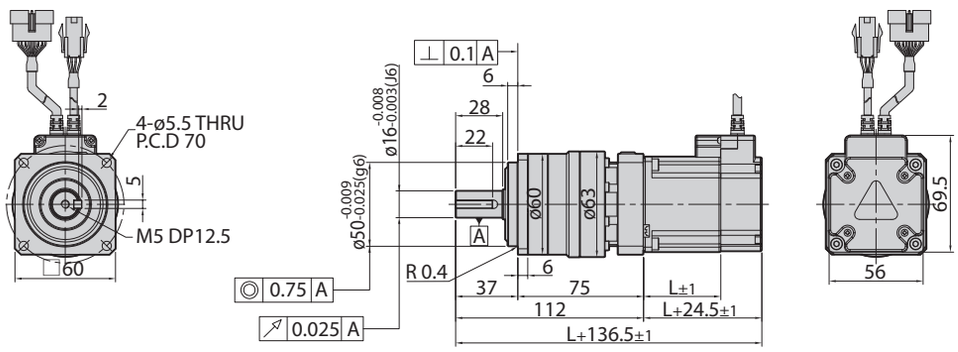

Unit Part Number	Motor	Stage	□Reduction Gear Ratio	L Length [mm]
Ezi-SERVO-PR-56S-■-PN□	EzM-56S-■-PN□	Double Stage	15, 25, 40, 50	46
Ezi-SERVO-PR-56M-■-PN□	EzM-56M-■-PN□		15, 25, 40, 50	55
Ezi-SERVO-PR-56L-■-PN□	EzM-56L-■-PN□		15, 25, 40, 50	80

* The code of encoder resolution will be marked in "■"

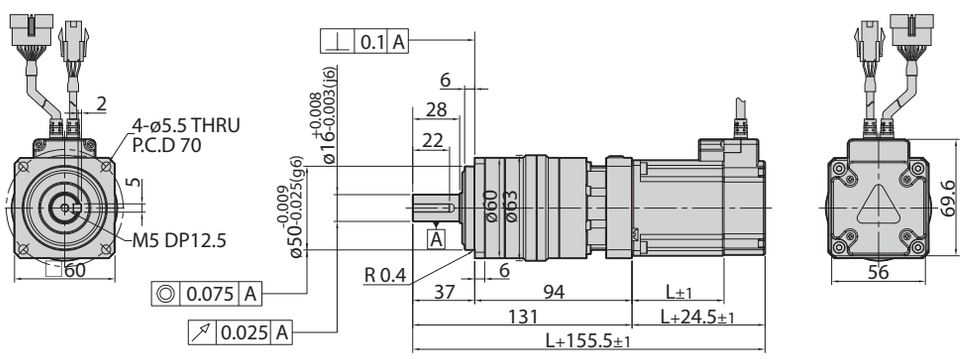

● Dimensions of Motor with Gearbox [mm]

60mm

Unit Part Number	Motor	Stage	□Reduction Gear Ratio	L Length [mm]
Ezi-SERVO-PR-60S-■-PN□	EzM-60S-■-PN□	Single Stage	3, 5, 8, 10	47
Ezi-SERVO-PR-60M-■-PN□	EzM-60M-■-PN□		3, 5, 8, 10	56
Ezi-SERVO-PR-60L-■-PN□	EzM-60L-■-PN□		3, 5, 8, 10	85

* The code of encoder resolution will be marked in "■"

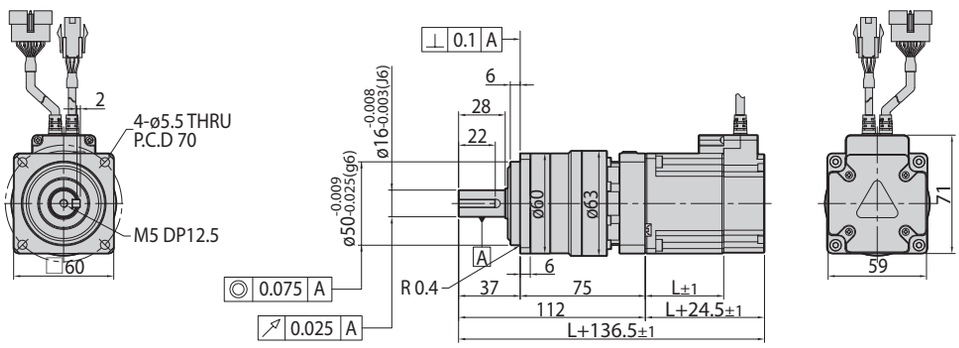

Unit Part Number	Motor	Stage	□Reduction Gear Ratio	L Length [mm]
Ezi-SERVO-PR-60S-■-PN□	EzM-60S-■-PN□	Double Stage	15, 25, 40, 50	47
Ezi-SERVO-PR-60M-■-PN□	EzM-60M-■-PN□		15, 25, 40, 50	56
Ezi-SERVO-PR-60L-■-PN□	EzM-60L-■-PN□		15, 25, 40, 50	85

* The code of encoder resolution will be marked in "■"

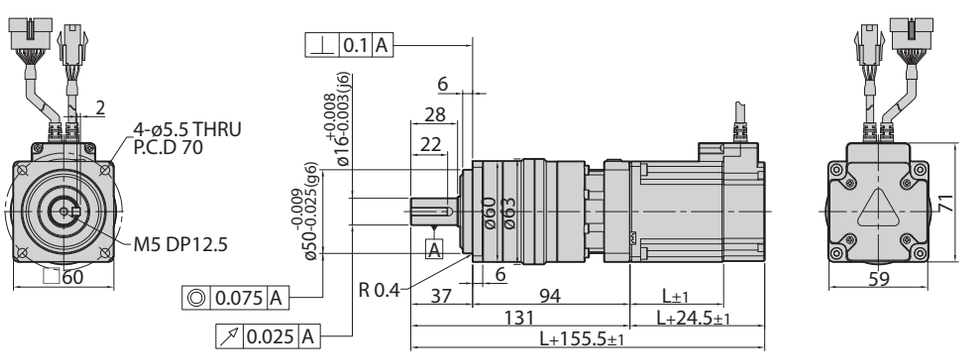

● Dimensions of Motor with Gearbox [mm]

86mm

Unit Part Number	Motor	Stage	□Reduction Gear Ratio	L Length [mm]
Ezi-SERVO-PR-86M-■-PN□	EzM-86M-■-PN□	Single Stage	3, 5, 8, 10	78
Ezi-SERVO-PR-86L-■-PN□	EzM-86L-■-PN□		3, 5, 8, 10	117
Ezi-SERVO-PR-86XL-■-PN□	EzM-86XL-■-PN□		3, 5, 8, 10	155

* The code of encoder resolution will be marked in "■"

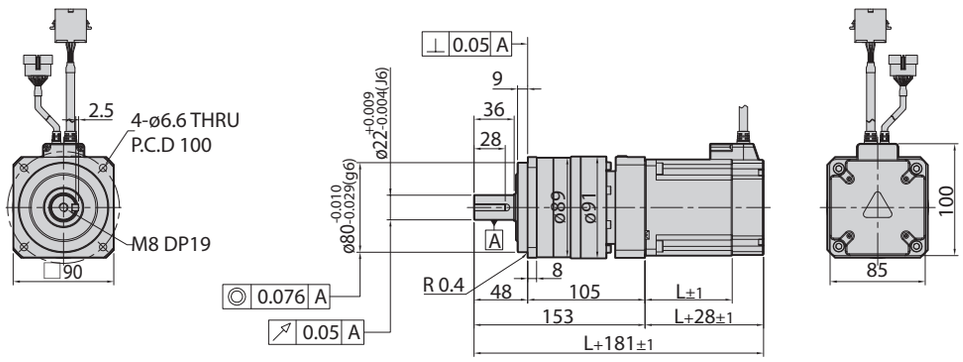

Unit Part Number	Motor	Stage	□Reduction Gear Ratio	L Length [mm]
Ezi-SERVO-PR-86M-■-PN□	EzM-86M-■-PN□	Double Stage	15, 25, 40, 50	78
Ezi-SERVO-PR-86L-■-PN□	EzM-86L-■-PN□		15, 25, 40, 50	117
Ezi-SERVO-PR-86XL-■-PN□	EzM-86XL-■-PN□		15, 25, 40, 50	155

* The code of encoder resolution will be marked in "■"

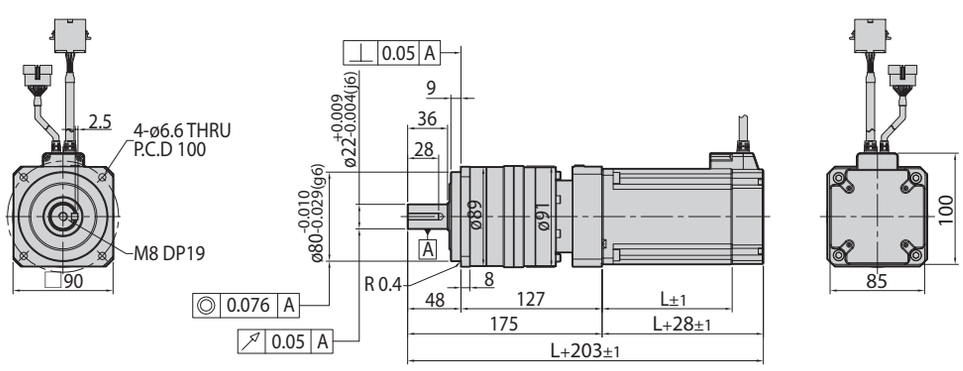

● Settings and Operation

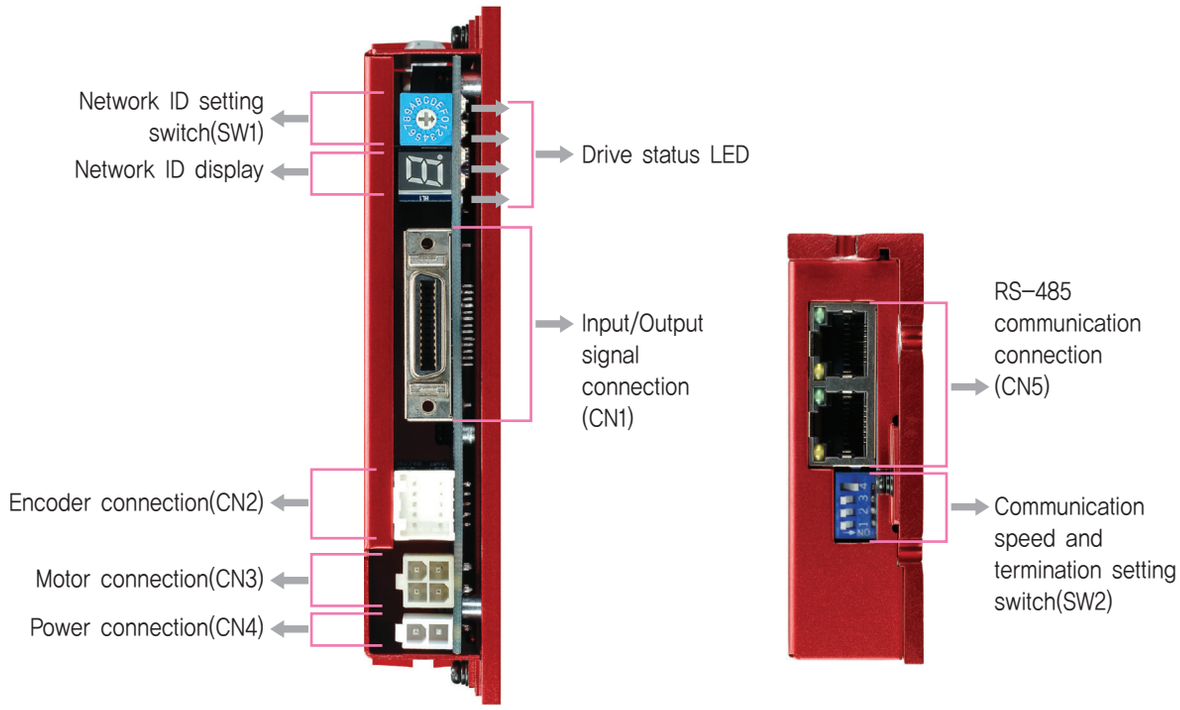

◆ 86mm Motor Drive(EzS-NDR-86 series)

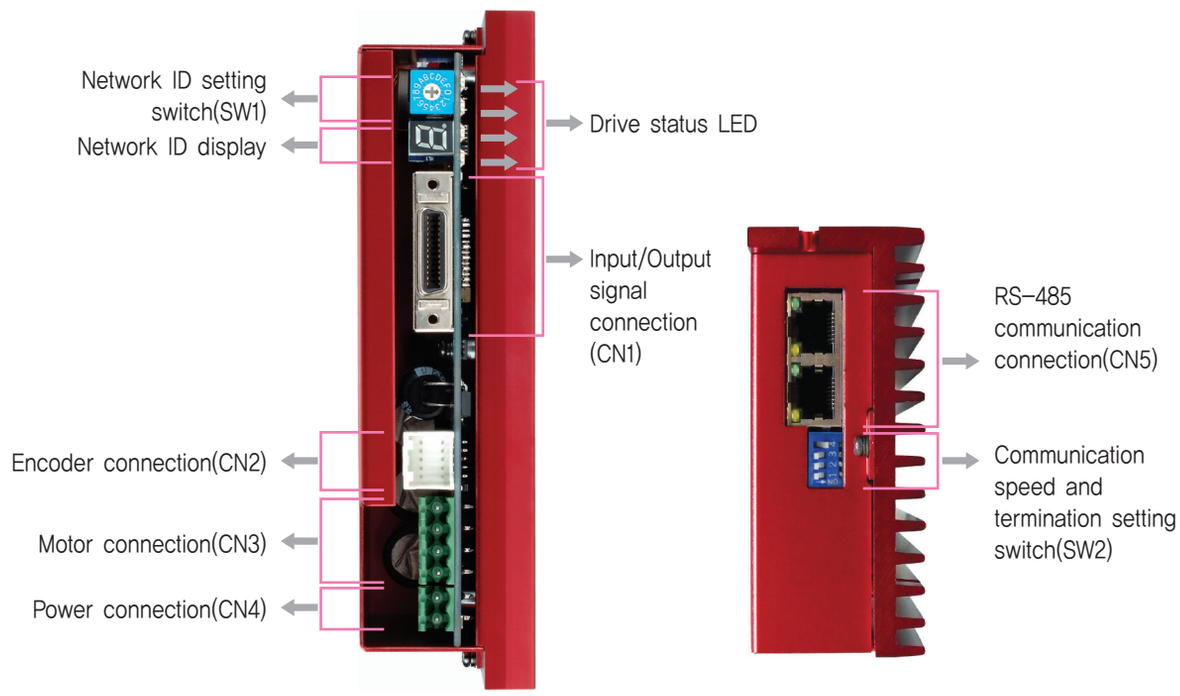

1. Drive status LED

Indication	Color	Function	ON/OFF Condition
PWR	Green	Power input indication	LED is turned ON when power is applied
INP	Yellow	Complete Positioning Motion	Lights On when Positioning error reaches within the preset pulse selected by parameter
SON	Orange	Servo On/Off Indication	Servo On: Lights On, Servo Off: Lights Off
ALM	Red	Alarm indication	Flash when protection function is activated (Identifiable which protection mode is activated by counting the blinking times)

◆ Protection functions and LED flash times

Times	Protection	Conditions
1	Over Current Error	The current through power devices in drive exceeds the limit value *1
2	Over Speed Error	Motor speed exceeds 3,000 [rpm]
3	Position Tracking Error	Position error value is higher than 90° in motor run state *2
4	Over Load Error	The motor is continuously operated more than 5 seconds under a load exceeding the max. torque
5	Over Temperature Error	Inside temperature of drive exceeds 85℃
6	Over Regeneratived Voltage Error	Back-EMF is higher than limit value *3
7	Motor Connect Error	The power is ON without connection of the motor cable to drive
8	Encoder Connect Error	Cable connection error in Encoder connection of drive
10	In-Position Error	After operation is finished, position error more than 1 pulse is continued for more than 3 seconds
11	System Error	Error occurs in drive system
12	ROM Error	Error occurs in parameter storage device(ROM)
15	Position Overflow Error	Position error value is higher than 90° in motor stop state *2

Alarm LED flash
(Ex, Position Tracking Error)

*1 : Limit value depends on motor model (Refer to the Manual)
*2 : Limit value can be change by parameter
*3 : Voltage limit of Back-EMF depends on motor model (Refer to the Manual)

※ For the details, please refer to the Manual.

2. Network ID Setting Switch(SW1)

Position	ID Number	Position	ID Number
0	0	8	8
1	1	9	9
2	2	A	10
3	3	B	11
4	4	C	12
5	5	D	13
6	6	E	14
7	7	F	15

※ Maximum 16 axis can be connected in one network.

3. Communication Speed and Termination Setting Switch(SW2)

Termination Setting Switch(SW2.1)

The drive installed at the end of the network must be terminated for reliable operation. Please termination setting switch is ON if drive installed at the end of the network.

Speed Setting Switch(SW2.2~SW2.4)

SW2.2~SW2.4 used for setting speed as follows

SW2.1	SW2.2	SW2.3	SW2.4	Baud Rate[bps]
–	OFF	OFF	OFF	9,600
–	ON	OFF	OFF	19,200
–	OFF	ON	OFF	38,400
–	ON	ON	OFF	57,600
–	OFF	OFF	ON	115,200*1
–	ON	OFF	ON	230,400
–	OFF	ON	ON	460,800
–	ON	ON	ON	921,600

*1 : Default setting value

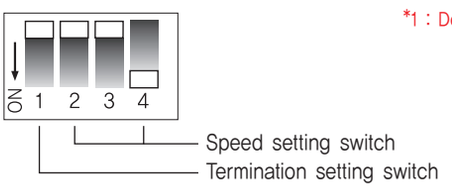

4. Input/Output Signal Connector(CN1)

NO.	Function	I/O
1	LIMIT+	Input
2	LIMIT-	Input
3	ORIGIN	Input
4	Digital In1	Input
5	Digital In6	Input
6	Digital In7	Input
7	Compare Out	Output
8	Digital Out1	Output
9	Digital Out2	Output
10	Digital Out3	Output
11	Digital Out4	Output
12	Digital Out5	Output
13	Digital Out6	Output
14	Digital In2	Input
15	Digital In3	Input
16	Digital In4	Input
17	Digital In5	Input
18	Digital In8	Input
19	Digital In9	Input
20	Digital Out7	Output
21	Digital Out8	Output
22	Digital Out9	Output
23	BRAKE+	Output
24	BRAKE-	Output
25	EXT_GND	Input
26	EXT_24VDC	Input

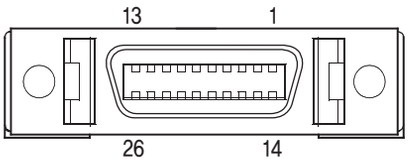

5. Encoder Connector(CN2)

NO.	Function	I/O
1	A+	Input
2	A-	Input
3	B+	Input
4	B-	Input
5	Z+	Input
6	Z-	Input
7	5VDC	Output
8	GND	Output
9	F.GND	----
10	F.GND	----

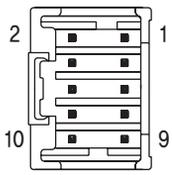

6. Motor Connector(CN3)

NO.	Function	I/O
1	A Phase	Output
2	B Phase	Output
3	/A Phase	Output
4	/B Phase	Output

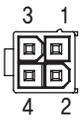

NO.	Function	I/O
1	/B Phase	Output
2	B Phase	Output
3	/A Phase	Output
4	A Phase	Output

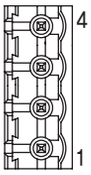

※Only for 86mm motor drive.

7. Power Connector(CN4)

NO.	Function	I/O
1	24VDC	Input
2	GND	Input

NO.	Function	I/O
1	GND	Input
2	40~70VDC	Input

※Only for 86mm motor drive.

8. RS-485 Communication Connector(CN5)

NO.	Function	NO.	Function
1	GND	6	Data-
2	GND	7	GND
3	Data+	8	GND
4	GND	LED 1, 3	Drive status
5	GND	LED 2, 4	Communication status

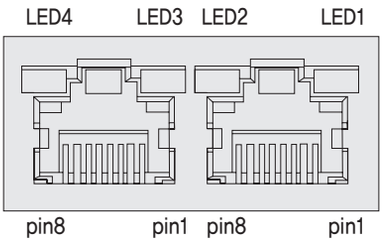

● System Configuration

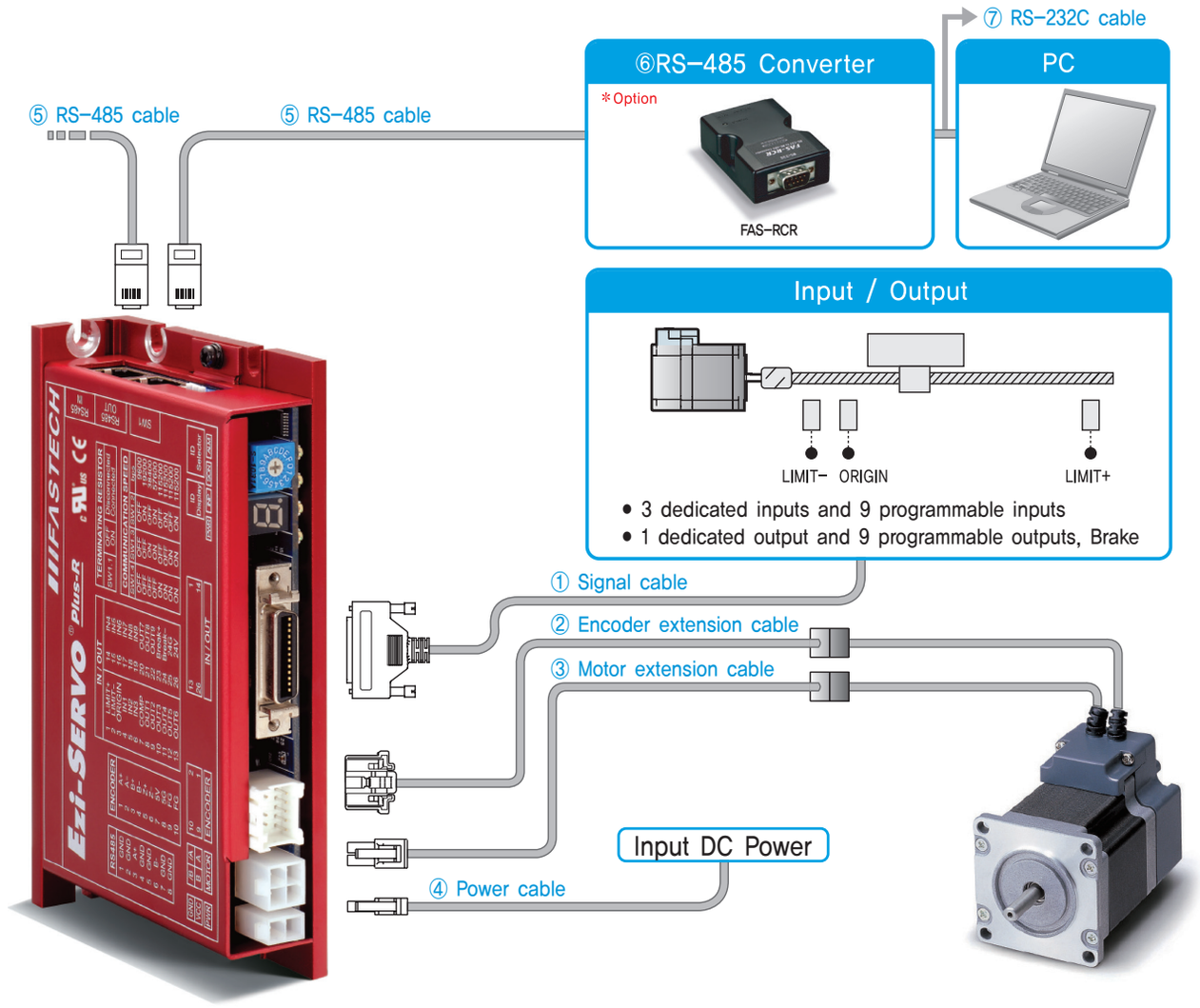

Type	Signal Cable	Encoder Cable	Motor Cable	Power Cable	RS-485 Cable
Length supplied	–	30cm	30cm	–	–
Max. Length	20m	20m	20m	2m	30m

1. Options

① Signal Cable

Available to connect between Input/Output signals and Ezi-SERVO Plus-R.

Item	Length [m]	Remark
CSVR-S-□□□F	□□□	Normal Cable
CSVR-S-□□□M	□□□	Robot Cable

□ is for Cable Length. The unit is 1m and Max. 20m length.

② Encoder Extension Cable

Available to extended connection between Encoder and Ezi-SERVO Plus-R.

Item	Length [m]	Remark
CSVO-E-□□□F	□□□	Normal Cable
CSVO-E-□□□M	□□□	Robot Cable

□ is for Cable Length. The unit is 1m and Max. 20m length.

③ Motor Extension Cable

Available to extended connection between motor and Ezi-SERVO Plus-R.

Item	Length [m]	Remark
CSVO-M-□□□F CSVO-M-□□□M	□□□ □□□	Normal Cable Robot Cable

□ is for Cable Length. The unit is 1m and Max. 20m length.

④ Power Cable

Available to connect between Power and Ezi-SERVO Plus-R.

Item	Length [m]	Remark
CSVO-P-□□□F CSVO-P-□□□M	□□□ □□□	Normal Cable Robot Cable

□ is for Cable Length. The unit is 1m and Max. 2m length.

⑤ RS-485 Cable

Available to connect between the drives of Ezi-SERVO Plus-R or with FAS-RCR.

Item	Length [m]	Remark
CGNR-R-0R6F CGNR-R-001F CGNR-R-1R5F CGNR-R-002F CGNR-R-003F CGNR-R-005F	0.6 1 1.5 2 3 5	Normal Cable

⑥ FAS-RCR(RS-232C to RS-485 Converter)

Item	Specification
Comm. Speed	Max. 115.2 [kbps]
Comm. Distance	RS-232C: Max. 15m RS-485: Max. 1.2km
Connection Type	RS-232C: DB9 Female RS-485: RJ-45
Dimension	50X75X23mm
Weight	38g
Power	Powered from PC (Usable for external DC5~24V)

⑦ RS-232C Cable

Available to connect between RS-232C port of master and FAS-RCR.

Item	Length [m]	Remark
CGNR-C-002F CGNR-C-003F CGNR-C-005F	2 3 5	Normal Cable

⑧ TB-Plus(Interface Board)

Available to connect more conveniently between Input/Output signal and Ezi-SERVO Plus-R.

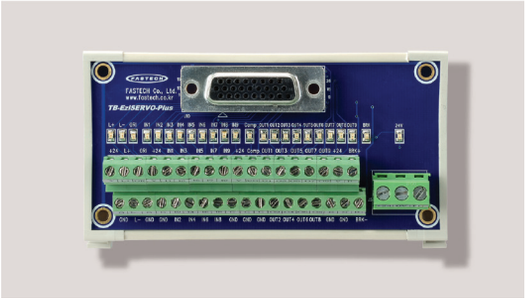

⑨ Interface Cable for TB-Plus

Available to Connect between TB-Plus Interface Board and Ezi-SERVO Plus-R.

Item	Length [m]	Remark
CIFD-S-□□□F CIFD-S-□□□M	□□□ □□□	Normal Cable Robot Cable

□ is for Cable Length. The unit is 1m and Max. 20m length.

2. Connector Specifications

Connector specifications for cabling to drive.

Purpose		Item	Part Number	Manufacturer
Power (CN4)		Housing Terminal	5557-02R 5556T	MOLEX
Motor	Drive Side (CN3)	Housing Terminal	5557-04R 5556T	MOLEX
	Motor Side	Housing Terminal	5557-04R 5556T	MOLEX
Encoder	Drive Side (CN2)	Housing Terminal	51353-1000 56134-9000	MOLEX
	Encoder Side	Housing Terminal	SMP-09V-NC SHF-001T-0.8BS	JST
Signal (CN1)		Connector Backshell	10126-3000PE 10326-52F0-008	3M

※ Above connector is the most suitable product for the drive applied. Another equivalent connector can be used.

● System Configuration [86mm Motor Drive]

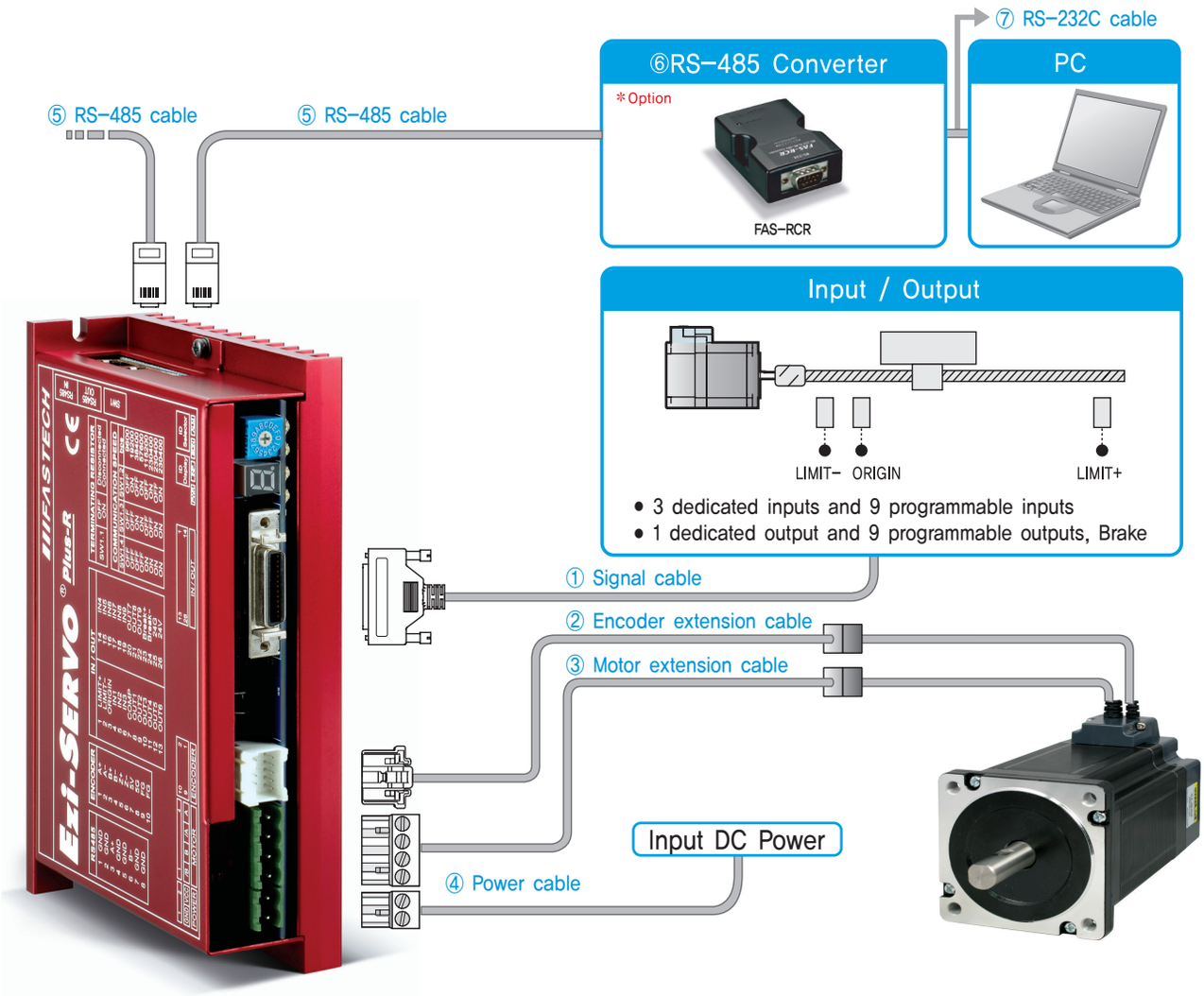

Type	Signal Cable	Encoder Cable	Motor Cable	Power Cable	RS-485 Cable
Length supplied	–	30cm	30cm	–	–
Max. Length	20m	20m	20m	2m	30m

1. Options

① Signal Cable

Available to connect between Input/Output signals and Ezi-SERVO Plus-R.

Item	Length [m]	Remark
CSVR-S-□□□F	□□□	Normal Cable
CSVR-S-□□□M	□□□	Robot Cable

□ is for Cable Length. The unit is 1m and Max. 20m length.

② Encoder Extension Cable

Available to extended connection between Encoder and Ezi-SERVO Plus-R.

Item	Length [m]	Remark
CSVO-E-□□□F	□□□	Normal Cable
CSVO-E-□□□M	□□□	Robot Cable

□ is for Cable Length. The unit is 1m and Max. 20m length.

③ Motor Extension Cable

Available to extended connection between motor and Ezi-SERVO Plus-R.

Item	Length [m]	Remark
CSVP-M-□□□F CSVP-M-□□□M	□□□ □□□	Normal Cable Robot Cable

□ is for Cable Length. The unit is 1m and Max. 20m length.

④ Power Cable

Available to connect between Power and Ezi-SERVO Plus-R.

Item	Length [m]	Remark
CSVP-P-□□□F CSVP-P-□□□M	□□□ □□□	Normal Cable Robot Cable

□ is for Cable Length. The unit is 1m and Max. 2m length.

⑤ RS-485 Cable

Available to connect between the drives of Ezi-SERVO Plus-R or with FAS-RCR.

Item	Length [m]	Remark
CGNR-R-0R6F CGNR-R-001F CGNR-R-1R5F CGNR-R-002F CGNR-R-003F CGNR-R-005F	0.6 1 1.5 2 3 5	Normal Cable

⑥ FAS-RCR(RS-232C to RS-485 Converter)

Item	Specification
Comm. Speed	Max. 115.2 [kbps]
Comm. Distance	RS-232C: Max. 15m RS-485: Max. 1.2km
Connection Type	RS-232C: DB9 Female RS-485: RJ-45
Dimension	50X75X23mm
Weight	38g
Power	Powered from PC (Usable for external DC5~24V)

⑦ RS-232C Cable

Available to connect between RS-232C port of master and FAS-RCR.

Item	Length [m]	Remark
CGNR-C-002F CGNR-C-003F CGNR-C-005F	2 3 5	Normal Cable

⑧ TB-Plus(Interface Board)

Available to connect more conveniently between Input/Output signal and Ezi-SERVO Plus-R.

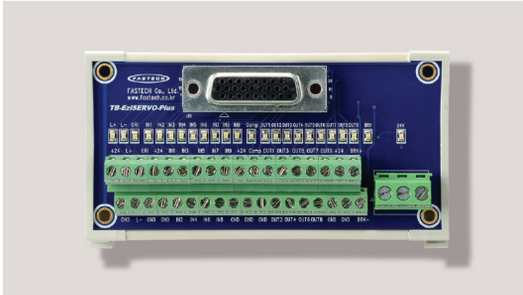

⑨ Interface Cable for TB-Plus

Available to Connect between TB-Plus Interface Board and Ezi-SERVO Plus-R.

Item	Length [m]	Remark
CIFD-S-□□□F CIFD-S-□□□M	□□□ □□□	Normal Cable Robot Cable

□ is for Cable Length. The unit is 1m and Max. 20m length.

2. Connector Specifications

Connector specifications for cabling to drive.

Purpose		Item	Part Number	Manufacturer
Power (CN4)		Terminal Block	AK950-2	PTR
Motor	Drive Side (CN3)	Terminal Block	AK950-4	PTR
	Motor Side	Housing Terminal	3191-4R1 1381T	MOLEX
Encoder	Drive Side (CN2)	Housing Terminal	51353-1000 56134-9000	MOLEX
	Encoder Side	Housing Terminal	SMP-09V-NC SHF-001T-0.8BS	JST
Signal (CN1)		Connector Backshell	10126-3000PE 10326-52F0-008	3M

※ Above connector is the most suitable product for the drive applied. Another equivalent connector can be used.

● External Wiring Diagram

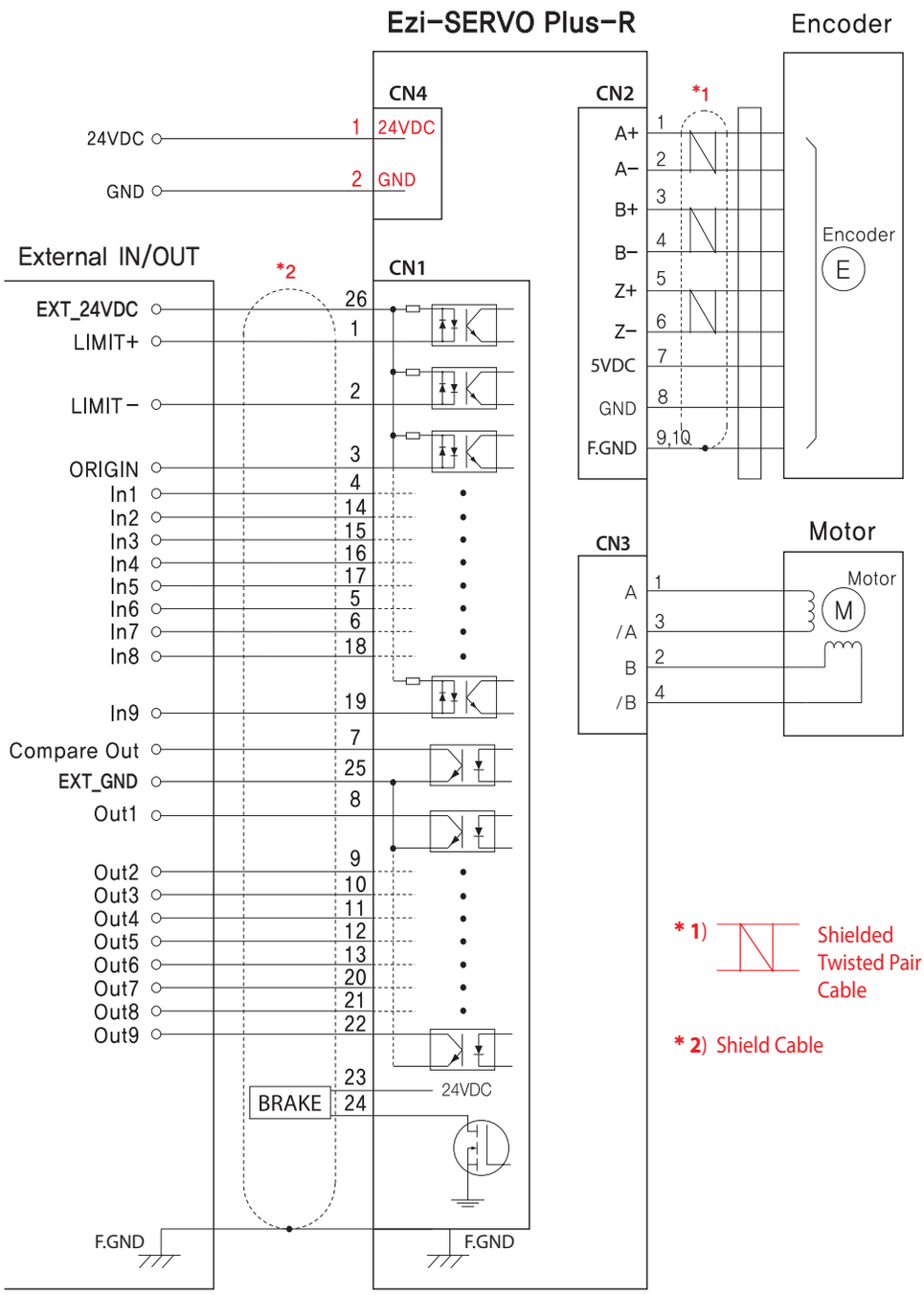

※ When connects I/O cable between controller and drive, please turn off the power of both controller and drive, in order to protect the drive from any damage.

CAUTION

Please refer to the Manual when connects motor extension cable.

Careful connection will be required to protect the drive from any damages.

● External Wiring Diagram [86mm Motor Drive]

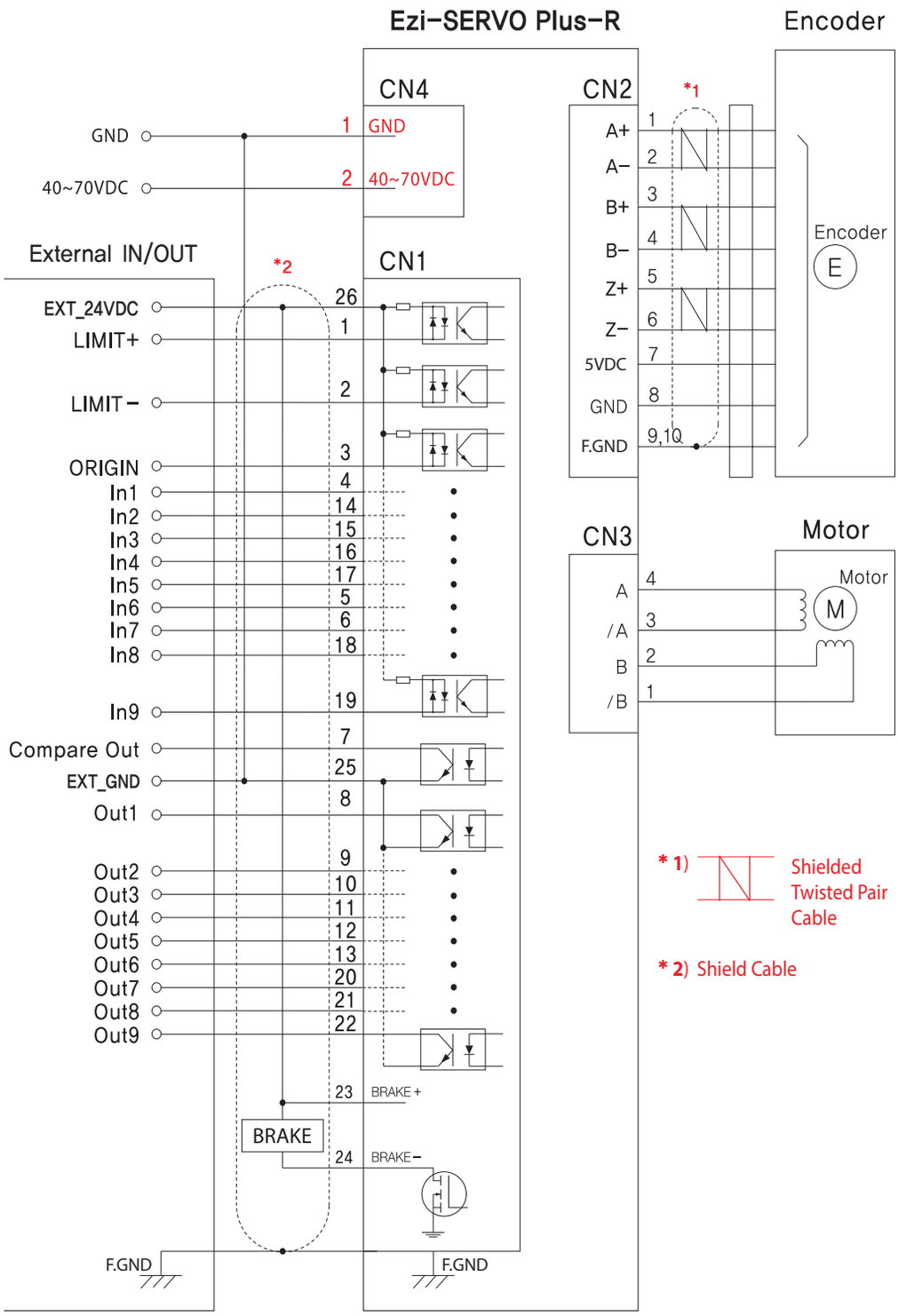

* 1) Shielded Twisted Pair Cable

* 2) Shield Cable

CAUTION

Please refer to the Manual when connects motor extension cable.

Careful connection will be required to protect the drive from any damages.

※ When connects I/O cable between controller and drive, please turn off the power of both controller and drive, in order to protect the drive from any damage.

● GUI(Graphic User Interface) Screenshot

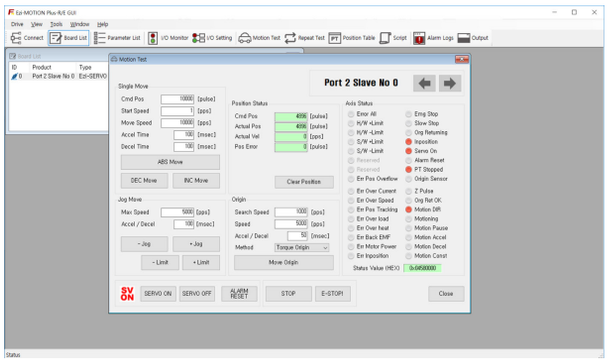

◆ Controller Lists and Motion Test

This screen display the controller list that connected to system. You can make a single move, jog and origin command and also the motor status is displayed.

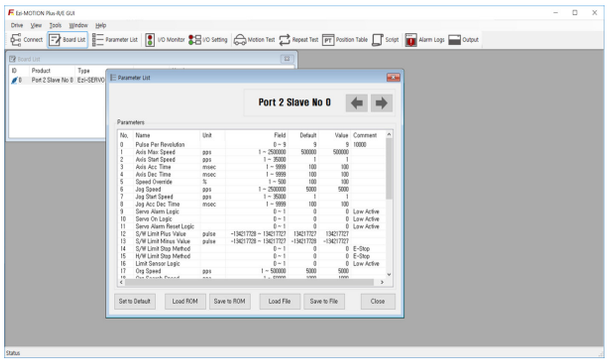

◆ Parameter List

All of the parameters are displayed and modified on this screen.

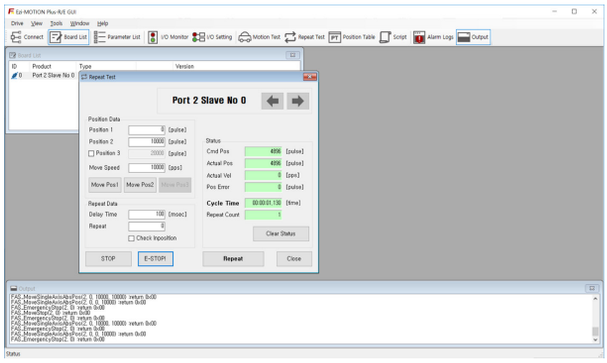

◆ Motion Repeat and Monitor Status

Target position, speed, delay time and repeat count are selected for repeat motion test. Motion library(DLL) is also displayed on screen.

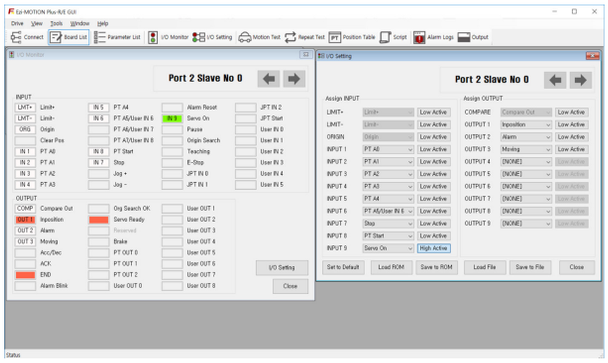

◆ I/O Monitoring and Setting

You can select various digital input and output signals of controller.

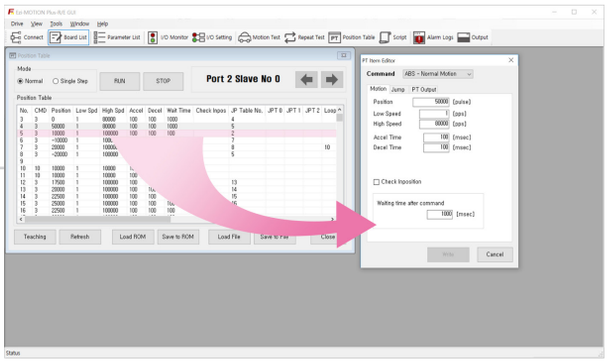

◆ Position Table

You can edit the position table and execute it. The position table data can be saved and loaded from Flash ROM and Windows file.

※ Graphic User Interface(GUI) Program can be downloaded from website. (www.fastech.co.kr)
※ Graphic User Interface(GUI) Program can support Window XP/7/8/10.
※ Graphic User Interface(GUI) Program can be update without prior notice for improving the performance or convenience of user.

MEMO

MEMO

MEMO

FASTECH

Fast, Accurate, Smooth Motion

FASTECH Co., Ltd.
Rm#1202, 401-dong, Bucheon Techno-Park,
655, Pyeongcheon-ro, Bucheon-si Gyeonggi-do,
Republic of Korea (Zip:14502)
TEL : +82-32-234-6300 FAX : +82-32-234-6302
E-mail : fastech@fastech.co.kr
Homepage : www.fastech.co.kr