Hybrid Stepper Motor 57BYGH450E-05

Mechanical Dimensions:

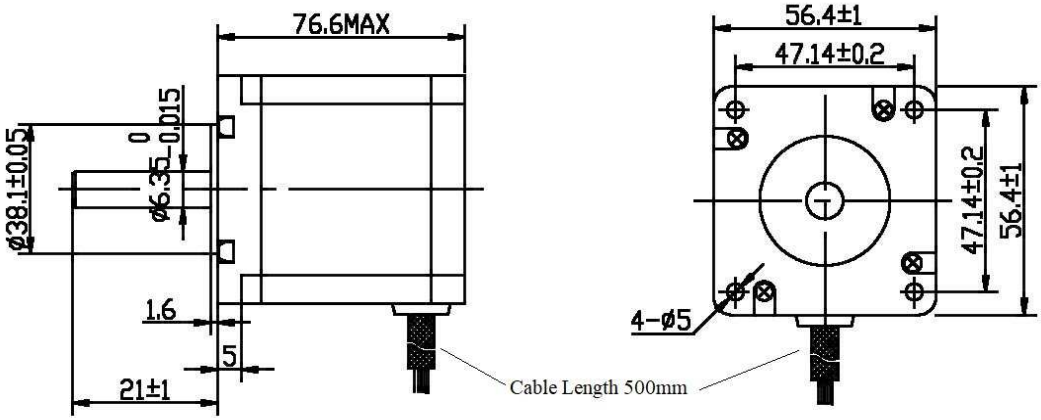

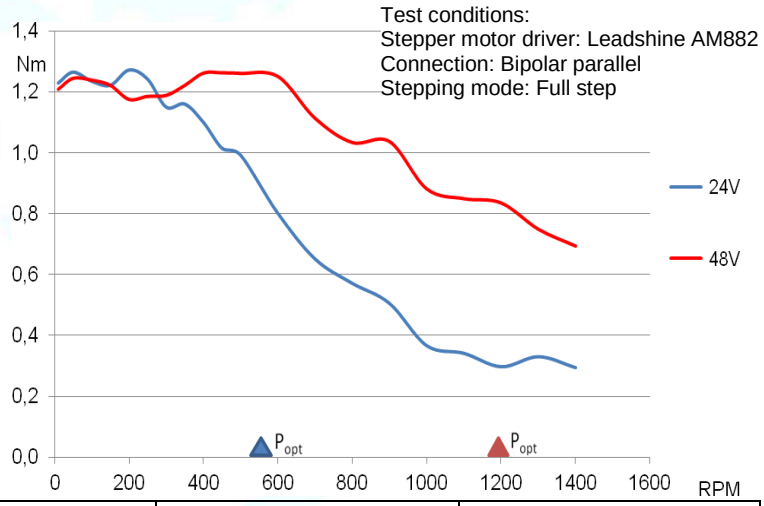

Electrical Specifications:

	Unipolar	Bipolar Serial	Bipolar Parallel
	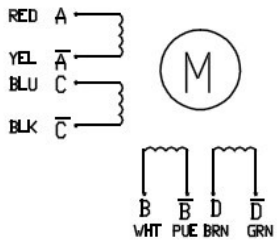	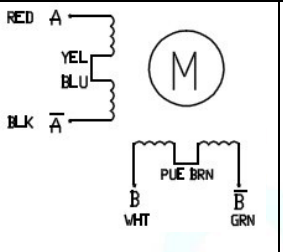	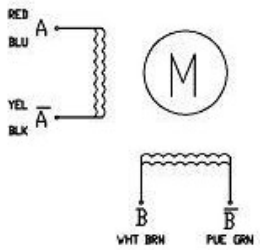
No. of phases	4	2	2
Step Angle	1.8 ± 0.09°		
Rated Voltage (V)	3.0	4.2	2.1
Current (A)	3.0	2.1	4.2
Resistance (Ω)	1.0	2	0.5
Inductance (mH)	1.5	6	1.5
Holding Torque coils on DC (Nm)	1.45	1.8	1.8
Holding Torque step mode (Nm)	1.0	1.3	1.3
Rotor Inertia (gcm²)	480		
Insulation Class	B		
Insulation Resistance	100MΩ, 500VDC		
Weight (kg)	1.1		

29.09.20