Solenoid valve(3/2 way)

3V2M Series

Symbol

Product feature

1. Direct acting type and normally closed mode, flexible in direction change.
2. Normally closed and normally open types are optional.
3. Structure in coaxial blanking mode: leakage proof and large air flow.
4. No need to add oil for lubrication.
5. Affiliated manual devices are equipped to facilitate installation and debugging.
6. Valve needs to be used with the sub-base and allows various connection combinations to save space.
7. It is easy to examine when there are faults owning to the unified air intake and exhaust and unified wiring.
8. Flexible combination and strong expansion capability can make any combination or expansion of the numbers of direction control valves that are connected.
9. Special sub-base seal, NC or NO functions can not be converted by flipping seal direction.

Specification

Model	3V2M
Fluid	Air(to be filtered by 40μm filter element)
Acting	Direct acting
Port size [Note1]	1/8"
Valve type	3 port 2 position
Orifice size	1.7mm^2(Cv=0.1)
Exhaust type	Centralized exhaust , Separated exhaust
Operating pressure	0~0.8MPa(0~114psi)
Proof pressure	1.2MPa(175psi)
Temperature	-20~70℃
Material of body	Aluminum alloy

[Note1] G thread is available.

Coil specification

Item	Specification
Standard voltage	AC220V、AC110V、AC24V、DC24V、DC12V
Scope of voltage	AC: ±15% DC: ±10%
Power consumption	AC: 7VA DC: 7.0W
Protection	IP65(DIN40050)
Temperature classification	B Class
Electrical entry	Terminal, Grommet
Activating time	0.05 sec and below
Max. frequency [Note1]	10 cycle/sec

[Note1] The maximum actuation frequency is in the no-load state.

Ordering code

Ordering code for valve

3V2M NC A □

① ② ③ ④

①Model	②Acting type	③Standard voltage	④Electrical entry
3V2M: Solenoid valve(3/2 way, with manifold)	NC: Normally closed NO: Normally opened	A: AC220V B: DC24V C: AC110V E: AC24V F: DC12V	Blank: Terminal I: Grommet[Note]

[Note] The wire length is 0.5m.

Ordering code for manifold

3V2M 5F D G

① ② ③ ④

①Model	②Number of stations	③Exhaust type	④Thread type
3V2M: Solenoid valve(3/2 way, with manifold)	1F: 1 Stations 2F: 2 Stations …… 20F: 20 Stations	Blank: Centralized exhaust D: Separated exhaust	G: G Thread

[Note]: Manifold kits contains manifold, seal and screw. The port size is only 1/8".

Ordering code for valve's group(valve+manifold)

3V2M NC A □ – 5F D G

① ② ③ ④ ⑤ ⑥ ⑦

①Model	②Acting type	③Standard voltage	④Electrical entry	⑤Number of stations	⑥Exhaust type	⑦Thread type
3V2M: Solenoid valve (3/2 way, with manifold)	NC: Normally closed NO: Normally opened	A: AC220V B: DC24V C: AC110V E: AC24V F: DC12V	Blank: Terminal I: Grommet	1F: 1 Station 2F: 2 Stations 3F: 3 Stations …… 20F: 20 Stations	Blank:Centralized exhaust D: Separated exhaust	G: G Thread

Ordering code for blank plate

P–3V2M–R2

① ② ③

①Subassembly type	②Valve type	③Accessories type
P: subassembly	3V2M: Solenoid valve(3/2 way, with manifold)	R2: Blank plate for manifold

[Note]: Blank plate kits contains blank plate and screw.

Flow chart

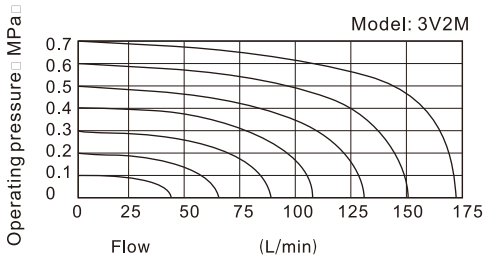

Inner structure

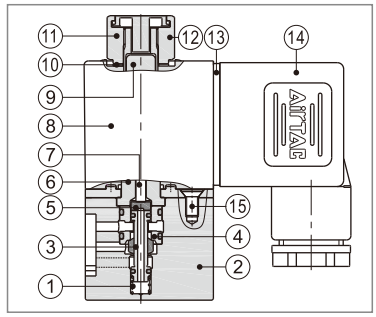

No.	Item	No.	Item
1	Spring	9	Armature
2	Body	10	Washer
3	Spool	11	Coil nut
4	Spacer	12	Manual button
5	Washer	13	Gasket
6	Electromagnet set	14	Connector
7	Mandril	15	Pilot screw
8	Coil		

Dimensions

Valve(Terminal)

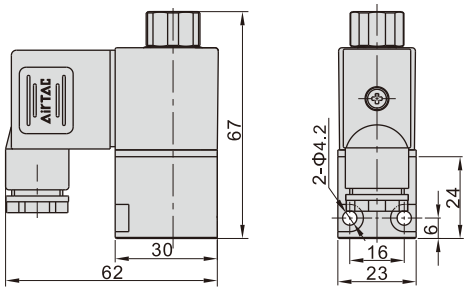

Valve(Grommet)

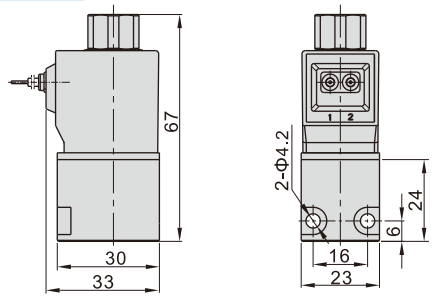

Valve's group(Terminal, Centralized exhaust)

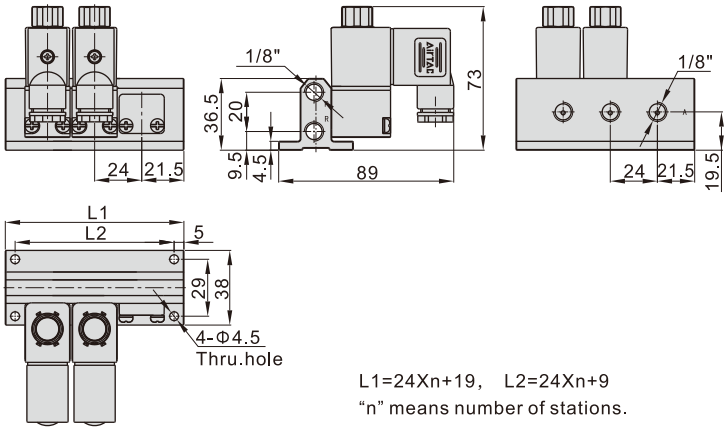

L1=24Xn+19, L2=24Xn+9
"n" means number of stations.

Valve's group(Grommet, Centralized exhaust)

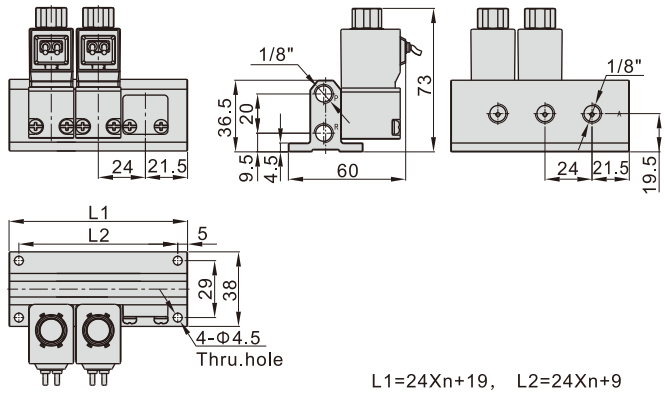

L1=24Xn+19, L2=24Xn+9
"n" means number of stations.

Valve's group(Terminal, Separated exhaust)

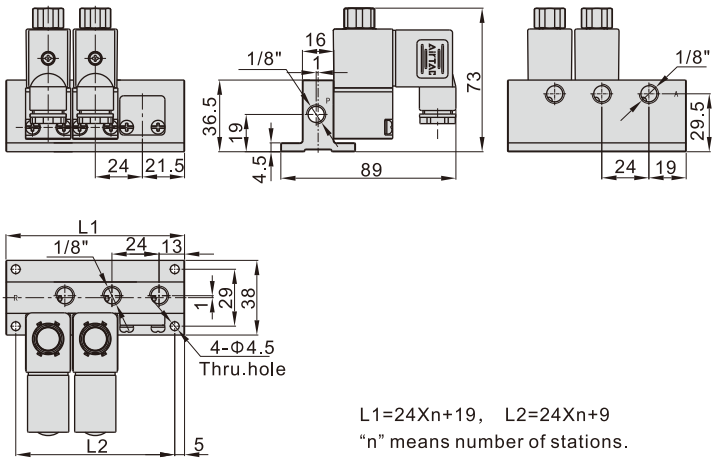

L1=24Xn+19, L2=24Xn+9
"n" means number of stations.

Valve's group(Grommet, Separated exhaust)

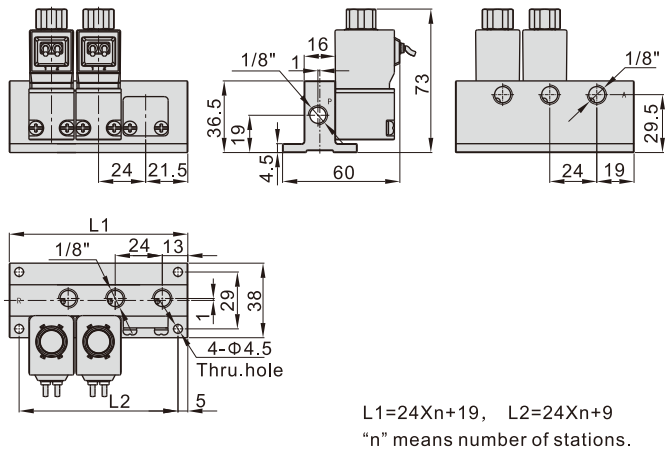

L1=24Xn+19, L2=24Xn+9
"n" means number of stations.